1.2.1 Photodiode Energy Sensors

10pJ to 15µJ

Features

- Silicon detectors
- Very sensitive - down to 10pJ
- Repetition rates to 20kHz
- Wide spectral range

PD10-C / PD10-pJ-C

Model	PD10-C [b]				PD10-pJ-C [b]			
Use	**Low energies**				**Lowest energies**			
Aperture mm	Ø10				Ø10			
Absorber Type	Si photodiode				Si photodiode			
Spectral Range µm [a]	0.19 - 1.1				0.2 - 1.1			
Surface Reflectivity % approx.	50				30			
Calibration Uncertainty ±% [a]	5				5			
Max Pulse Width Setting	2µs		5µs		2µs		5µs	
Energy Scales	20µJ to 20nJ		20µJ to 20nJ		200nJ to 200pJ		200nJ to 200pJ	
Lowest Measurable Energy nJ [c]	1 at 900nm		1 at 900nm		0.01 at 900nm		0.01 at 900nm	
Max Pulse Width ms [d]	0.002		0.005		0.002		0.005	
Maximum Pulse Rate pps	20kHz		20kHz [e]		20kHz		20kHz [g]	
Noise on Lowest Range nJ	0.05		0.05		0.001		0.001	
Additional Error with Frequency %	±1% to 10kHz ±1.5% to 20kHz		±1% to 20kHz [f]		±1% to 20kHz		±1% to 20kHz [h]	
Linearity with Energy for > 10% of full scale [c]	±1.5%		±1.5%		±1.5%		±1.5%	
Damage Threshold J/cm²	0.1		0.1		0.1		0.1	
Maximum Average Power mW	50 at 800nm		50 at 800nm		0.5		0.5	
Maximum Average Power Density W/cm²	50		50		5		5	
Maximum Energy vs. Wavelength	Wavelength	Max Energy	Wavelength	Max Energy	Wavelength	Max Energy	Wavelength	Max Energy
	<300nm	5µJ	<300nm	13µJ	<300nm	80nJ	<300nm	180nJ
	350-550nm	2µJ	350-550nm	6µJ	350-550nm	30nJ	350-550nm	70nJ
	>800nm	1.1µJ	>800nm	3µJ	>800nm	17nJ	>800nm	40nJ
Fiber Adapters Available (see page 147)	ST, FC, SMA, SC				ST, FC, SMA, SC			
Weight kg	0.25				0.25			
Compliance	CE, UKCA, China RoHS				CE, UKCA, China RoHS			
Version								
Part number: Standard Sensor	**7Z02944 (1.5m cable)**				**7Z02945**			
Sensor with different cable length	**7Z02944B (5m cable), 7Z02944C (10m cable)**							
Note: (a) This is basic calibration accuracy. In certain wavelength regions calibration there is additional error as tabulated here.	<250nm add ±3% >950nm add ±2%				<250nm add ±2% >950nm add ±2%			

Note: (b) The PD10-C & PD10-pJ-C sensors are not under ISO/IEC 17025:2017 accreditation.

Note: (c) With the "user threshold" setting set to minimum. For other settings, the spec is for >10% of full scale or greater than twice the "user threshold", whichever is greater. The user threshold is not available with LaserStar, Nova, Pulsar, USBI and Quasar. For these meters, the threshold is set to minimum and the linearity spec is >10% of full scale. The PD-C series will only operate with Nova meter with an additional adapter Ophir P/N 7Z08272 (see page 148). The adapter can introduce up to 1% additional measurement error. The user threshold feature allows adjustment of the internal threshold up to 25% of full scale if desired to avoid false triggering in noisy environments.
For further information, see the FAQs on our Website.

Note: (d) With the LaserStar, Pulsar, USBI, Quasar and Nova with adapter, the pulse width settings are displayed as follows: 10µs (for 2µs setting) and 20µs (for 5µs setting).

Note: (e) For energies up to 2µJ

Note: (f) Additional Error with Frequency of ±1% only for energy scales up to 2µJ. For higher energies ±1% up to 5kHz, -6% at 10kHz.

Note: (g) For energies up to 20nJ

Note: (h) Additional Error with Frequency of ±1% only for energy scales up to 20nJ. For higher energies ±1% up to 5kHz, -6% at 10kHz.
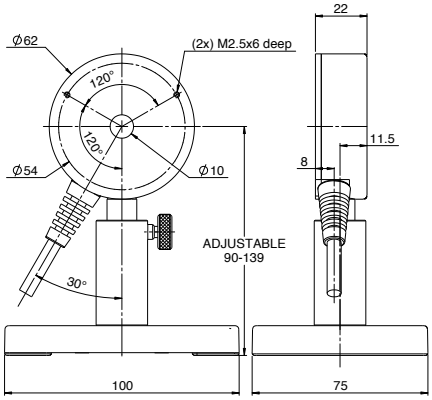
PD10-C / PD10-pJ-C