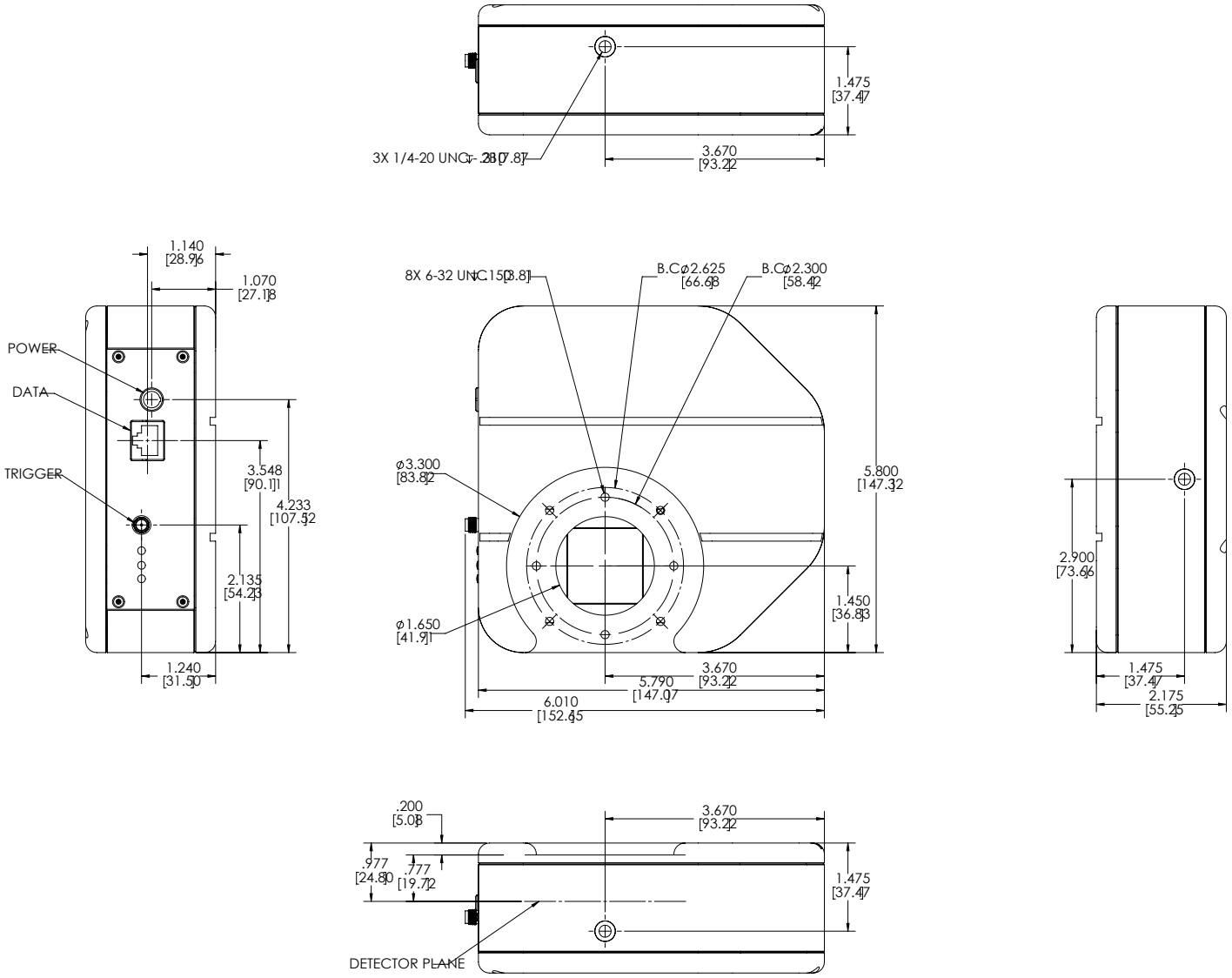
1.475
[37.47]
3X 1/4-20 UNC↧.28[7.87]
3.670
[93.22]
1.140
[28.96]
1.070
[27.18]
POWER
DATA
TRIGGER
3.548
[90.11]
4.233
[107.52]
2.135
[54.23]
1.240
[31.50]
8X 6-32 UNC↧.15[3.81]
B.C⌀2.625
[66.68]
B.C⌀2.300
[58.42]
⌀3.300
[83.82]
⌀1.650
[41.91]
5.800
[147.32]
1.450
[36.83]
3.670
[93.22]
5.790
[147.07]
6.010
[152.65]
2.900
[73.66]
1.475
[37.47]
2.175
[55.25]
.200
[5.08]
.977
[24.80]
.777
[19.72]
3.670
[93.22]
1.475
[37.47]
DETECTOR PLANE

Ophir®