SupIR 15-300mm f/5.5, Motorized Continuous Zoom
680313

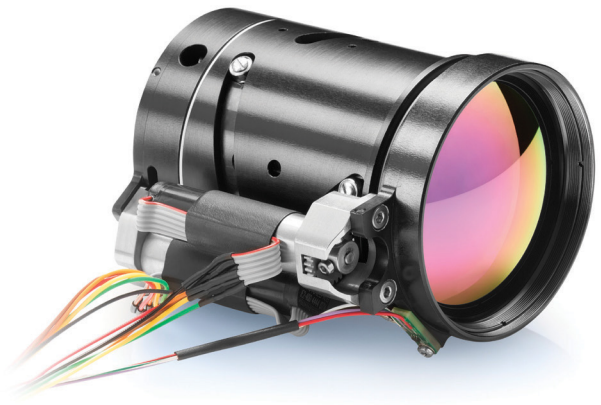

WFOV(15mm)	
HFOV	**640x512**
15µ	36.4°

NFOV(300mm)	
HFOV	**640x512**
15µ	1.8°

Property	Value	
Optical	**WFOV**	**NFOV**
Focal Length	15mm	300mm
F/#	5.5	
Cold Stop to FPA Distance	19.7mm-19.1mm	
Cold Stop CA	Ø3.58mm	
Average Transmission (3.4-5.0µm)	94% (HD)	
Back Focal Length	25.33mm in air	
Minimum Focus Range	5m	50m
Nuc (by defocus)	Yes	
Mechanical		
Focus Mechanism	Motorized	
Focus Time (minimum range to ∞)	≤1 sec.	
Zoom Mechanism	Motorized	
Zoom Time (NFOV to WFOV)	≤5 sec.	
Weight	560gr	
Max. Dimensions	Ø67mm x 93mm	

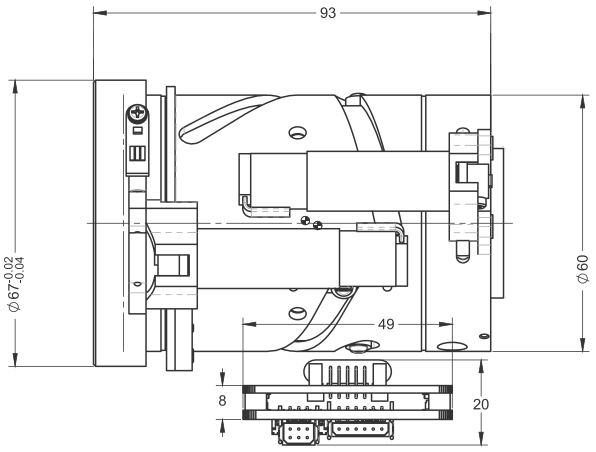

Property	Value
Electrical	
Lens Control	Designated lens controller
Supply Voltage	12V
Current Consumption	< 0.5A average, 1.0A peak
Communication Protocol	RS422
Environmental	
Operating Temperature	-32ºC to +80ºC
Storage Temperature	-54ºC to +85ºC
Sealing	IP 67 front element only
Configurations	
680313-001	High Durability FPA 640x512 pixels 20µ pitch
680313-002	Low Reflection Hard Carbon FPA 640x512 pixels 20µ pitch
680313-003	High Durability FPA 640x512 pixels 15µ pitch
680313-004	Low Reflection Hard Carbon FPA 640x512 pixels 15µ pitch

* NOTE: The ICD drawing provided here is primarily a representation and may not accurately reflect the product's actual dimensions and specifications. For precise integration specifications contact your local sales representative.