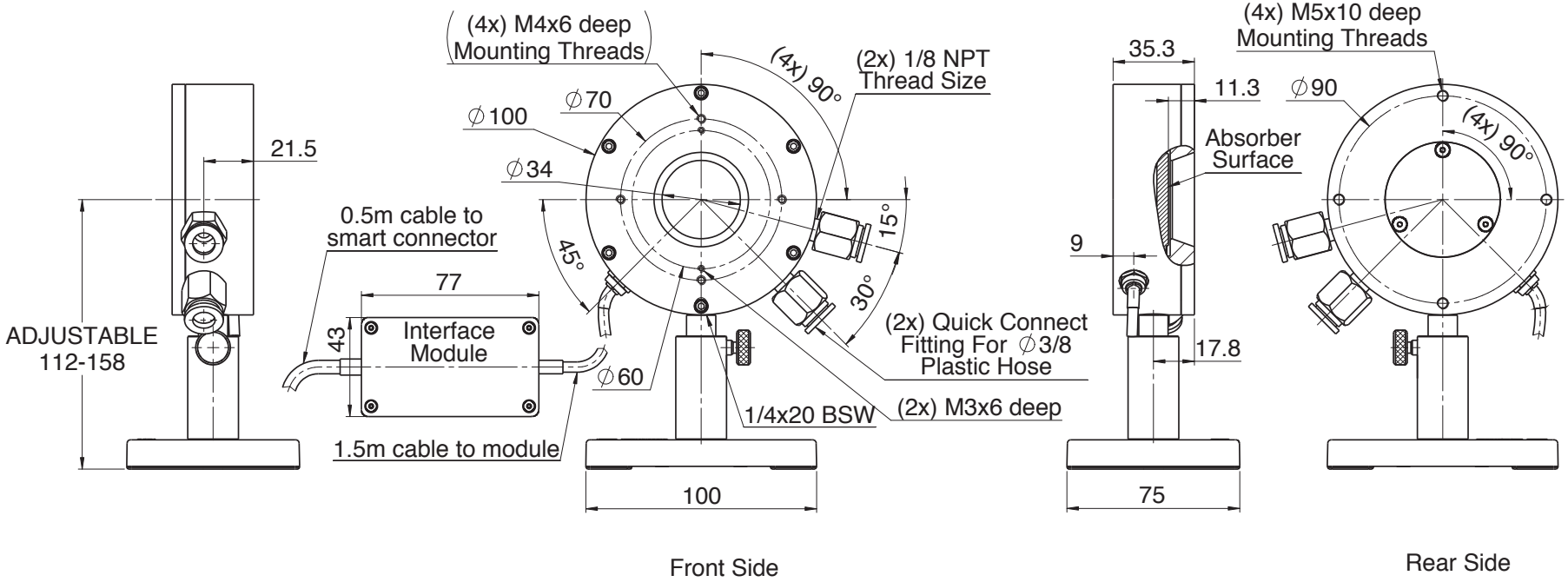
(4x) M4x6 deep
Mounting Threads
(4x) 90°
(2x) 1/8 NPT
Thread Size
∅70
∅100
∅34
21.5
0.5m cable to
smart connector
45°
15°
30°
77
43
Interface
Module
ADJUSTABLE
112-158
∅60
(2x) Quick Connect
Fitting For ∅3/8
Plastic Hose
1/4x20 BSW
(2x) M3x6 deep
1.5m cable to module
100
Front Side
35.3
11.3
Absorber
Surface
9
17.8
75
(4x) M5x10 deep
Mounting Threads
∅90
(4x) 90°
Rear Side

Ophir®