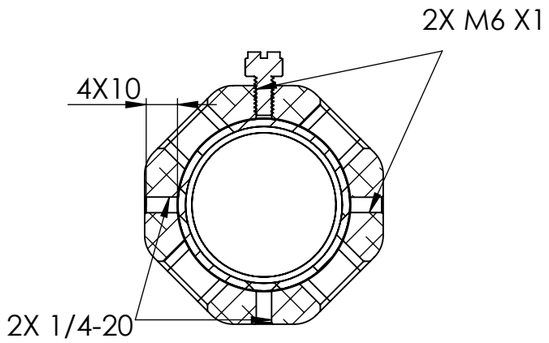

SECTION A-A

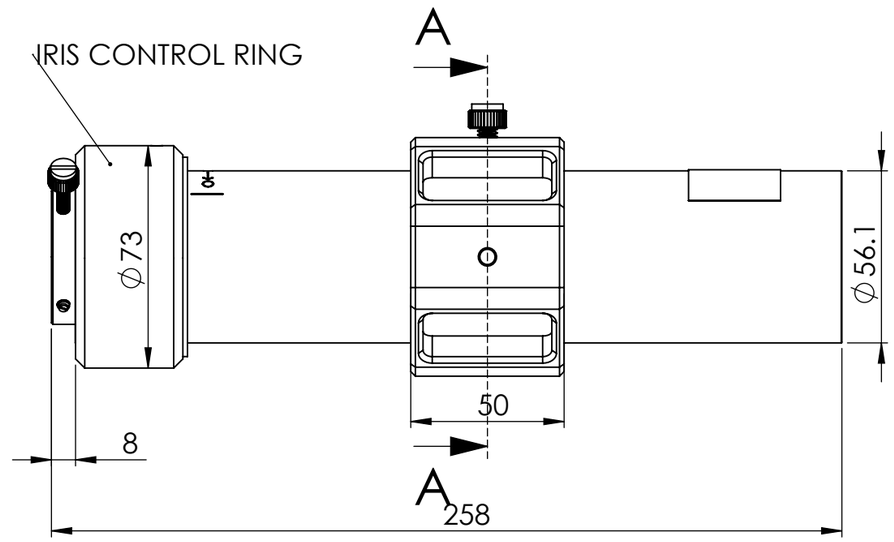

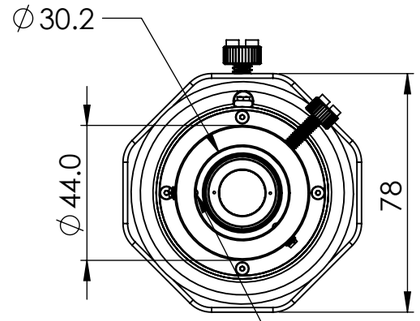

2X SET SCREW WITH PLUNGER FOR CAMERA MOUNT WITH 2 ND FILTERS