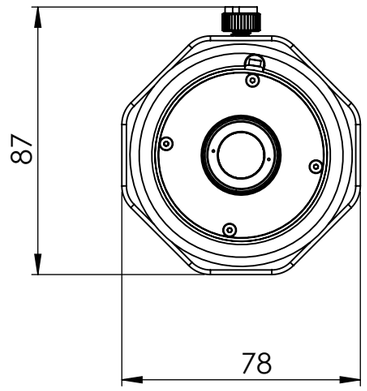
87
78

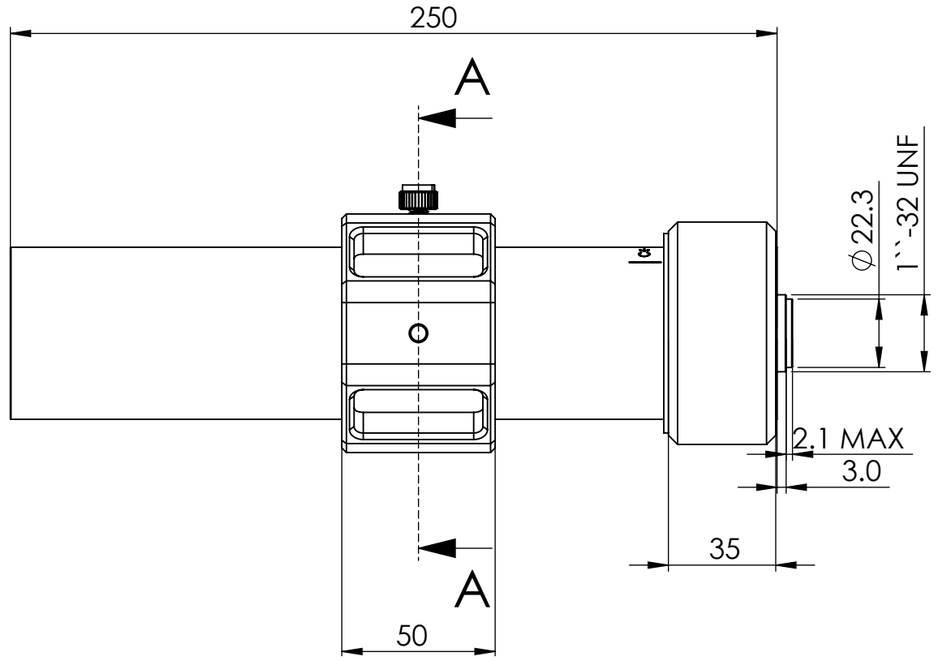
250
A
A
50
35
2.1 MAX
3.0
Ø22.3
1``-32 UNF

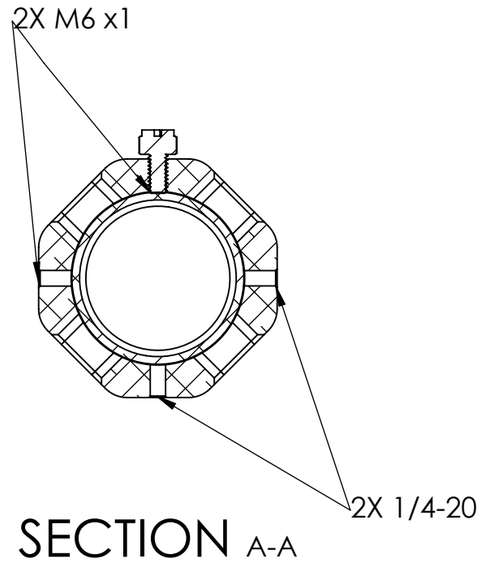
2X M6 x1
2X 1/4-20

SECTION A-A

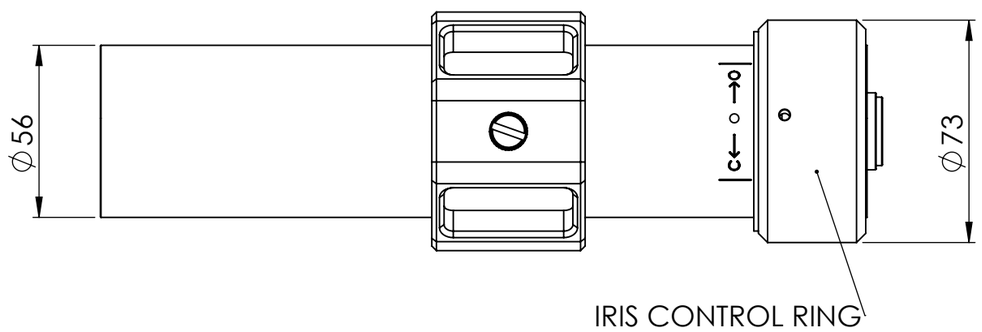
Ø56
Ø73
IRIS CONTROL RING