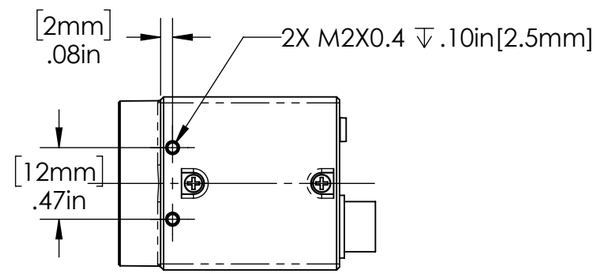
[2mm]
.08in
2X M2X0.4 ↧ .10in[2.5mm]
[12mm]
.47in

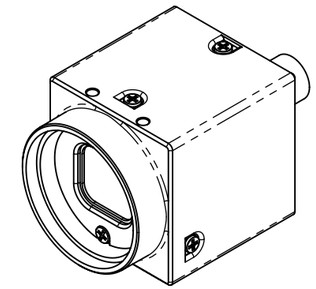

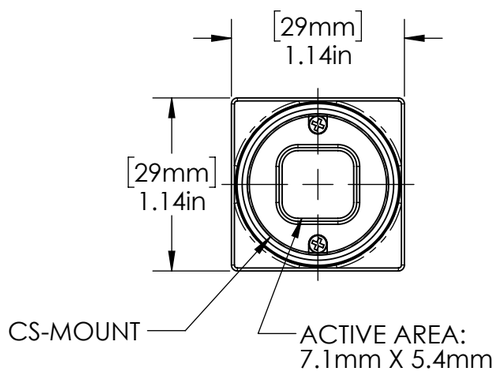
[29mm]
1.14in
[29mm]
1.14in
CS-MOUNT
ACTIVE AREA:
7.1mm X 5.4mm

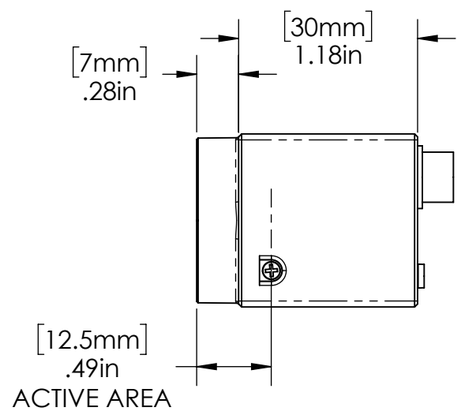
[30mm]
1.18in
[7mm]
.28in
[12.5mm]
.49in
ACTIVE AREA

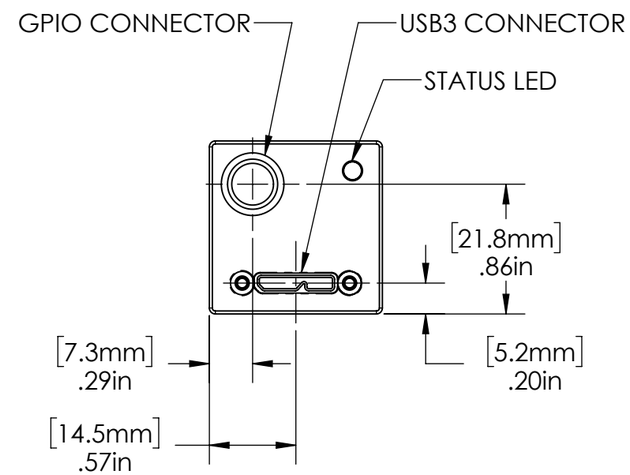
GPIO CONNECTOR
USB3 CONNECTOR
STATUS LED
[21.8mm]
.86in
[7.3mm]
.29in
[5.2mm]
.20in
[14.5mm]
.57in

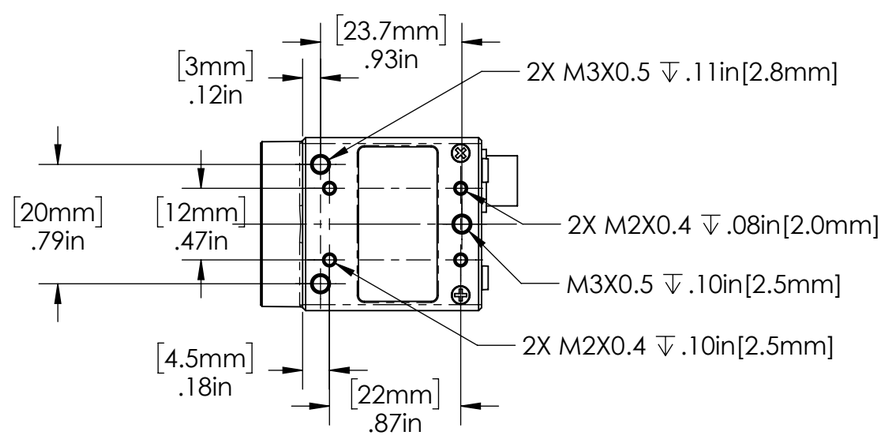
[23.7mm]
.93in
[3mm]
.12in
2X M3X0.5 ↧ .11in[2.8mm]
[20mm]
.79in
[12mm]
.47in
2X M2X0.4 ↧ .08in[2.0mm]
M3X0.5 ↧ .10in[2.5mm]
2X M2X0.4 ↧ .10in[2.5mm]
[4.5mm]
.18in
[22mm]
.87in