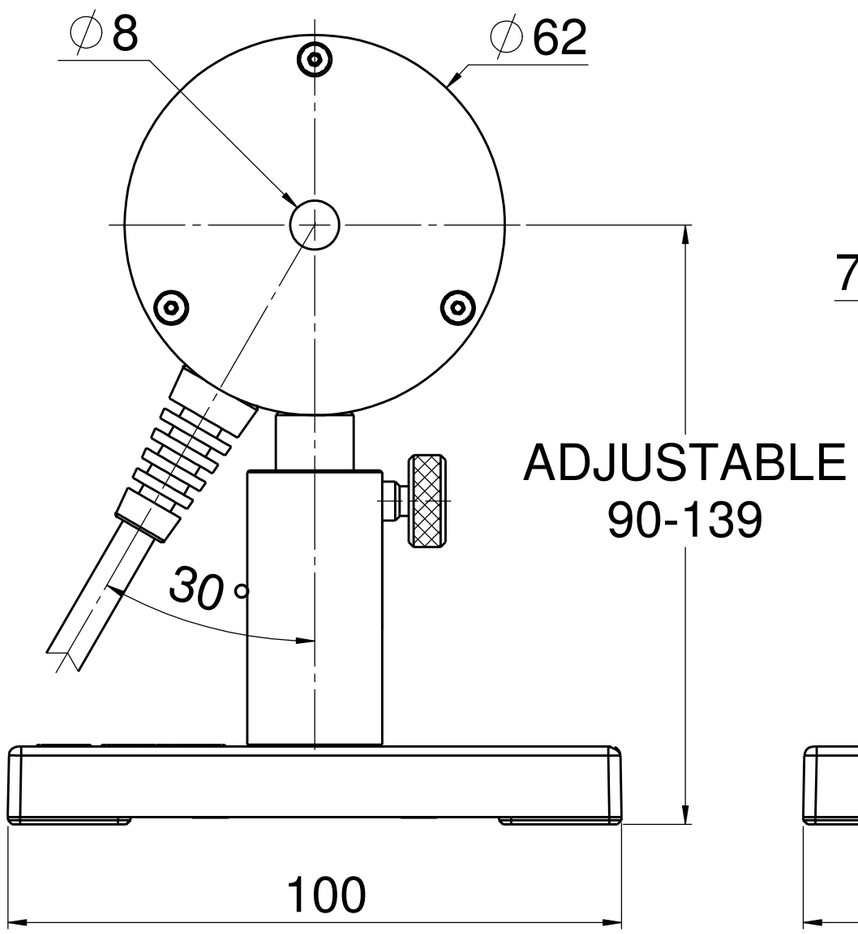
∅8
∅62
ADJUSTABLE
90-139
30°
100

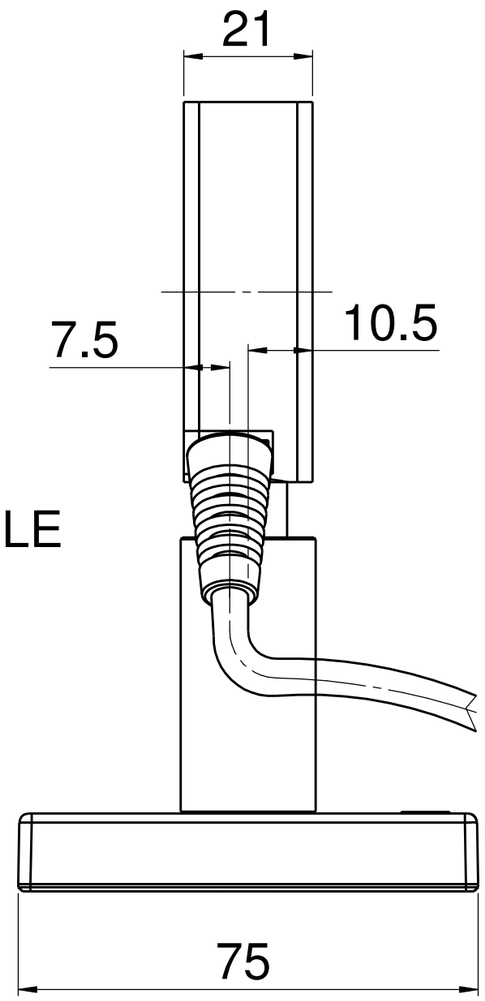
21
7.5
10.5
75

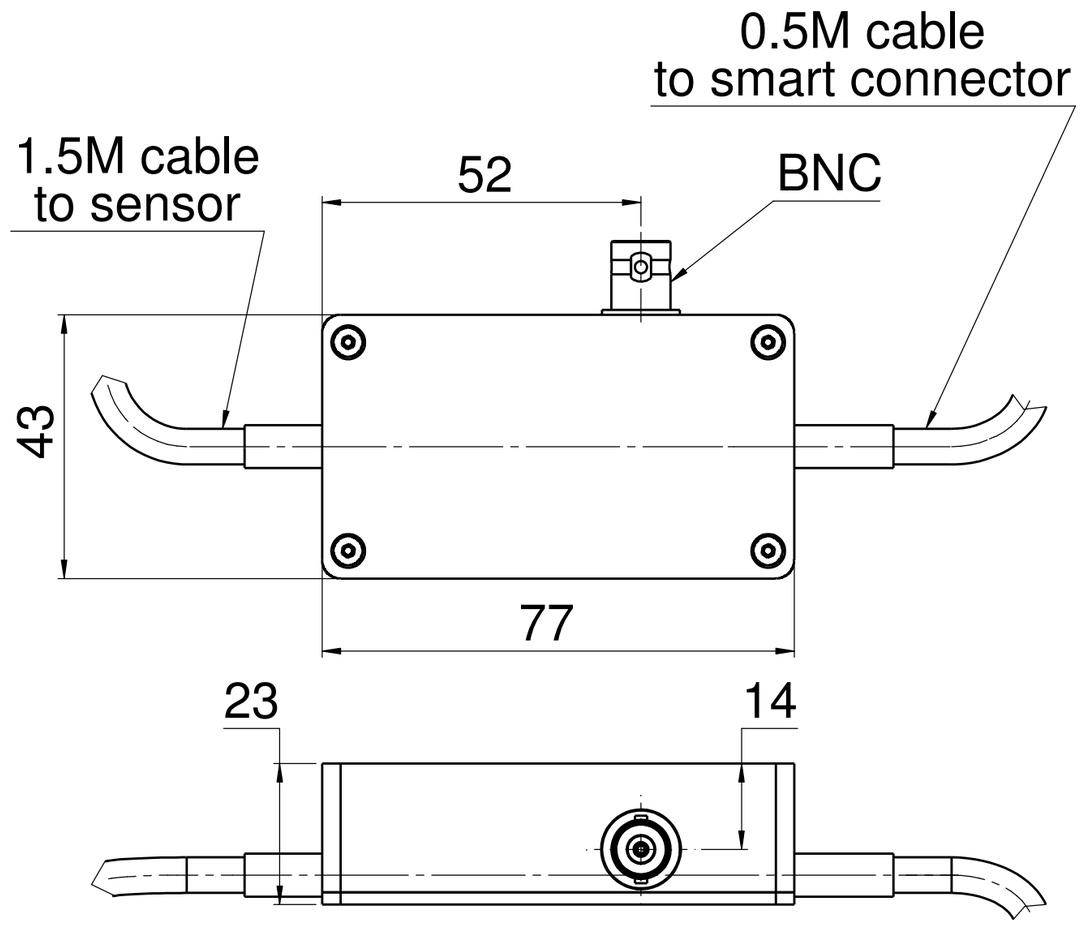
0.5M cable
to smart connector
1.5M cable
to sensor
52
BNC
43
77
23
14