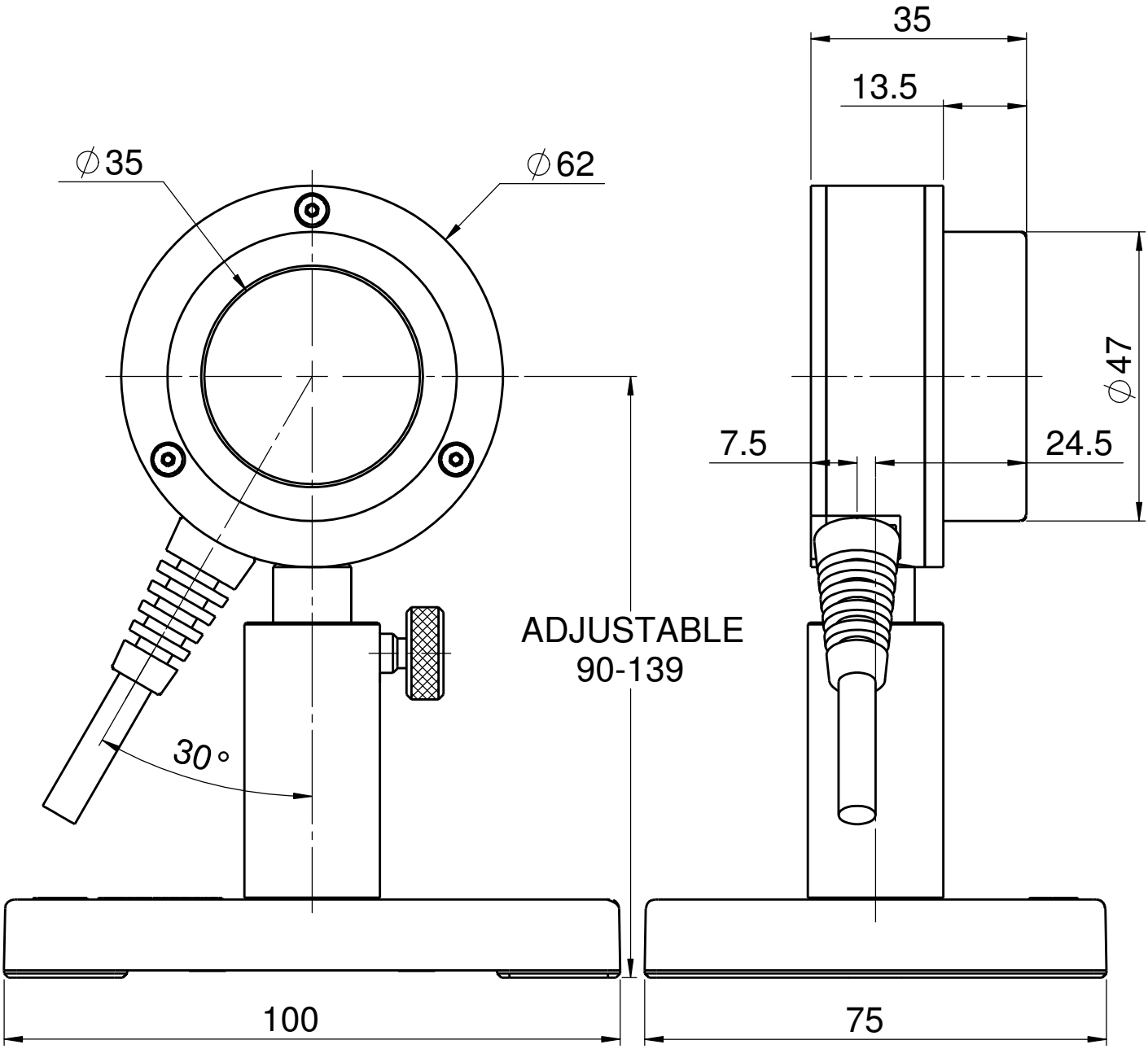
∅35
∅62
ADJUSTABLE
90-139
30°
100
35
13.5
∅47
7.5
24.5
75