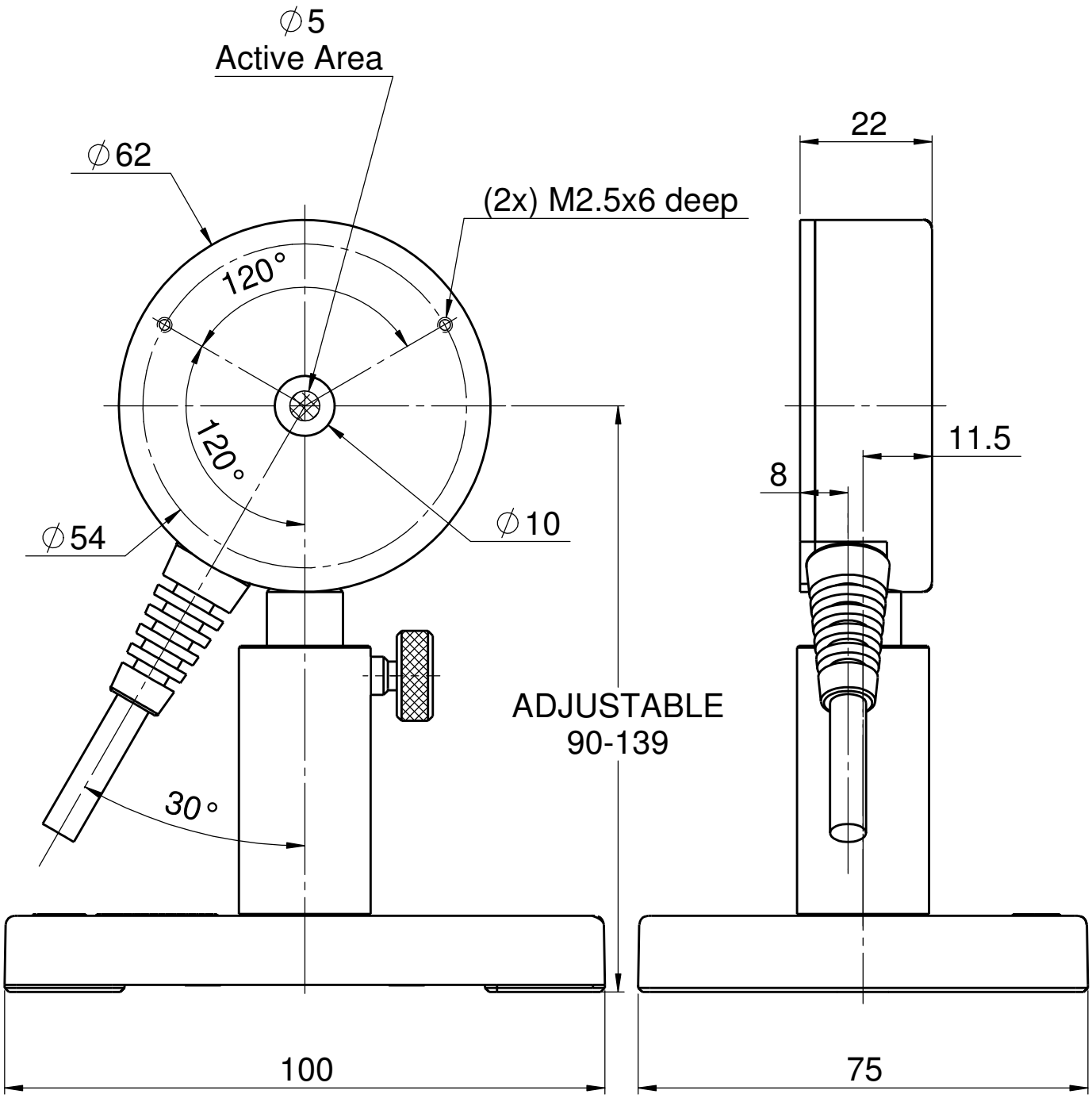
∅5
Active Area
∅62
(2x) M2.5x6 deep
120°
120°
∅54
∅10
30°
ADJUSTABLE
90-139
100
22
11.5
8
75