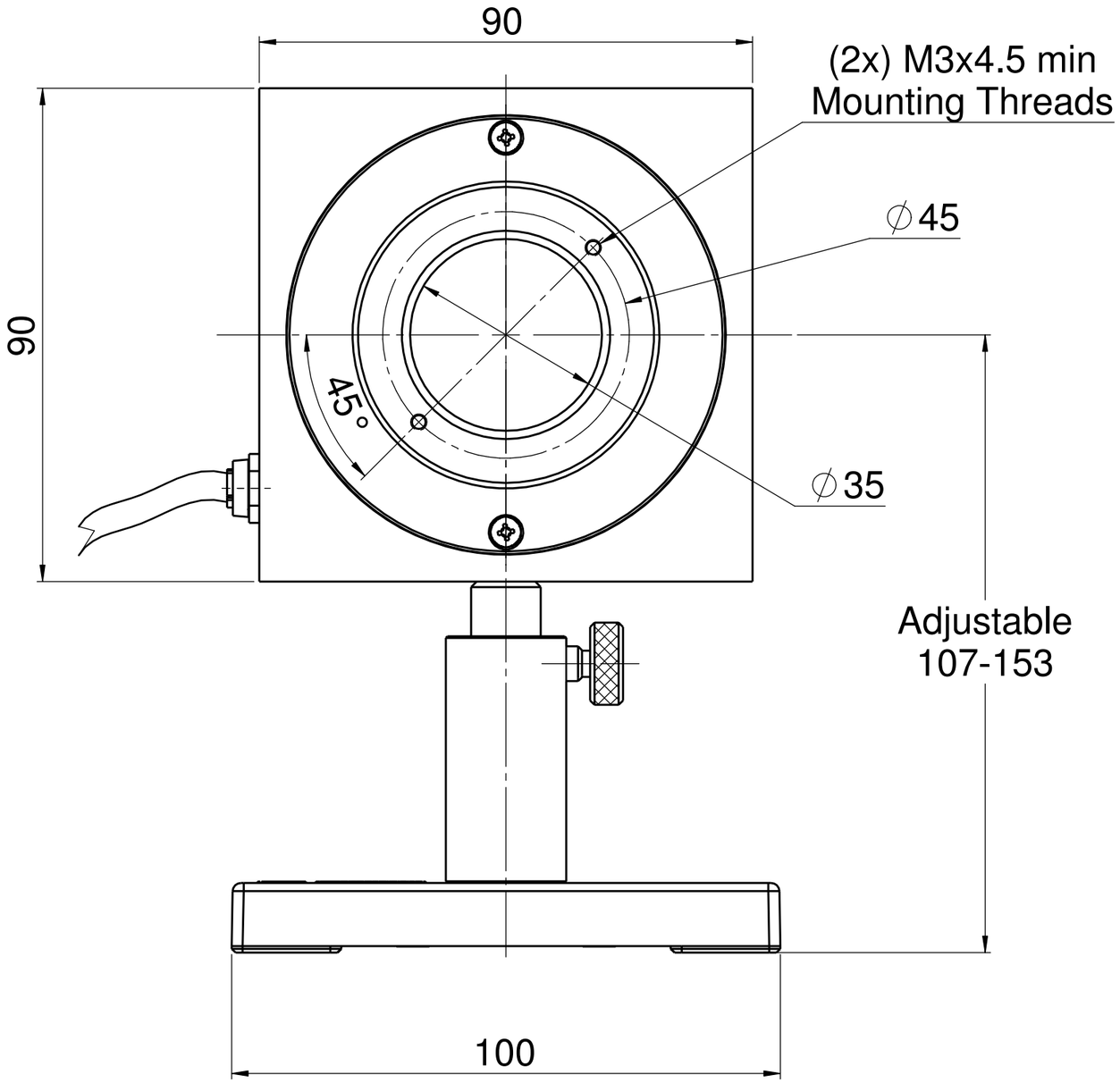
90
90
(2x) M3x4.5 min
Mounting Threads
∅45
45°
∅35
Adjustable
107-153
100

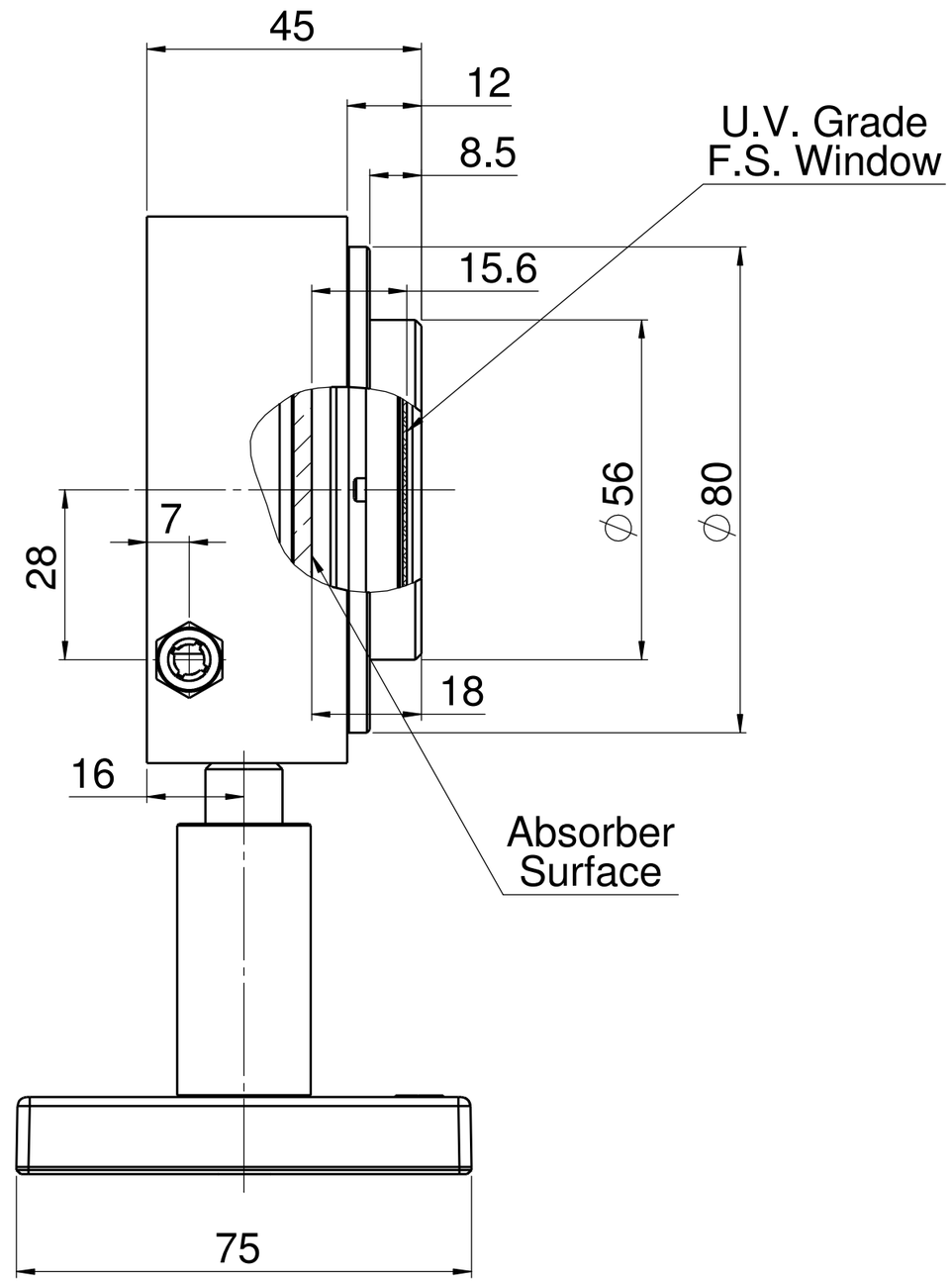
45
12
8.5
U.V. Grade
F.S. Window
15.6
∅56
∅80
7
28
18
16
Absorber
Surface
75