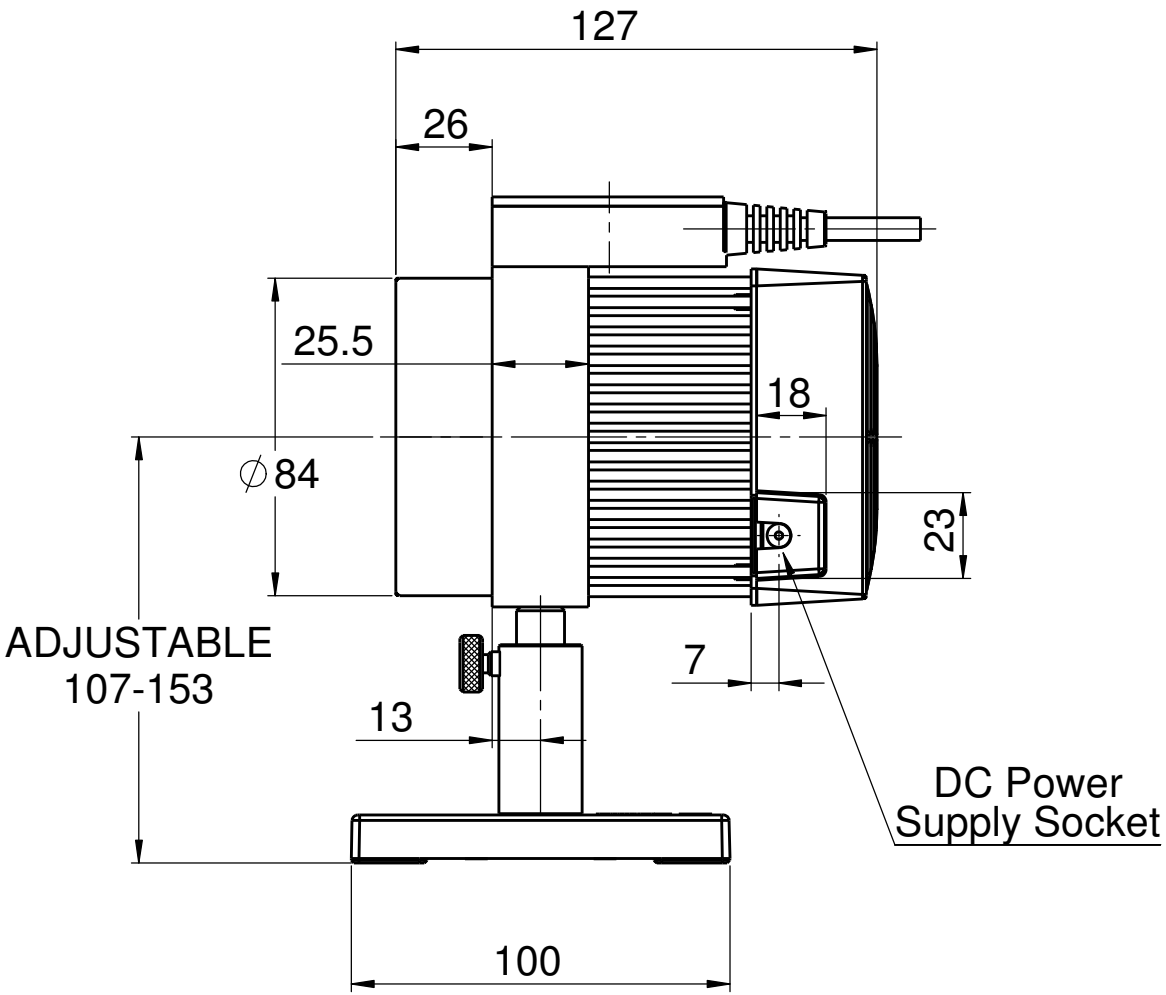
127
26
25.5
18
∅84
23
ADJUSTABLE
107-153
7
13
DC Power
Supply Socket
100

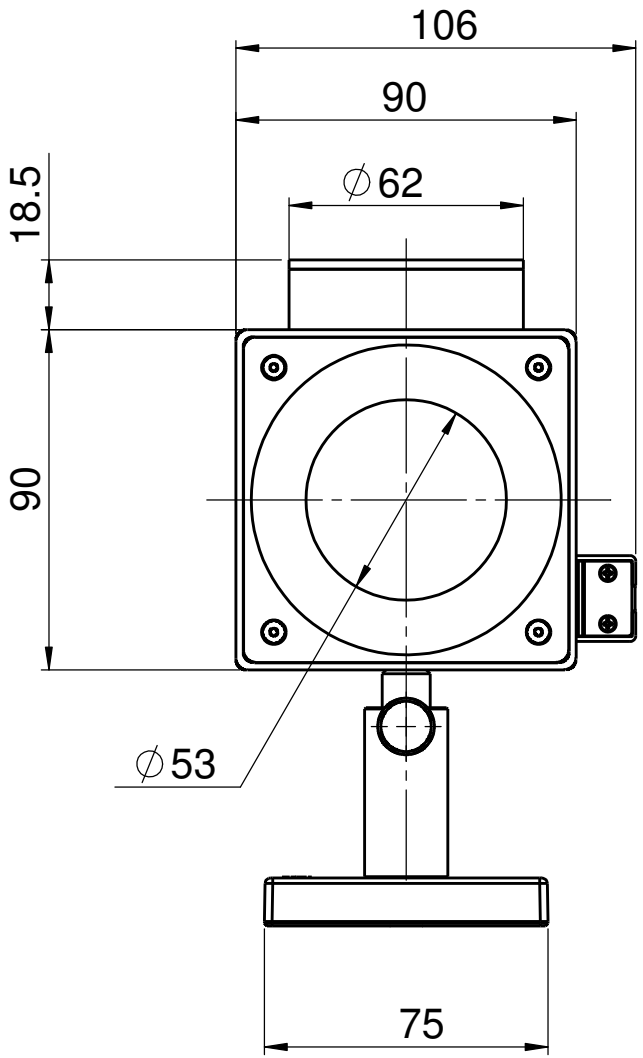
106
90
∅62
18.5
90
∅53
75