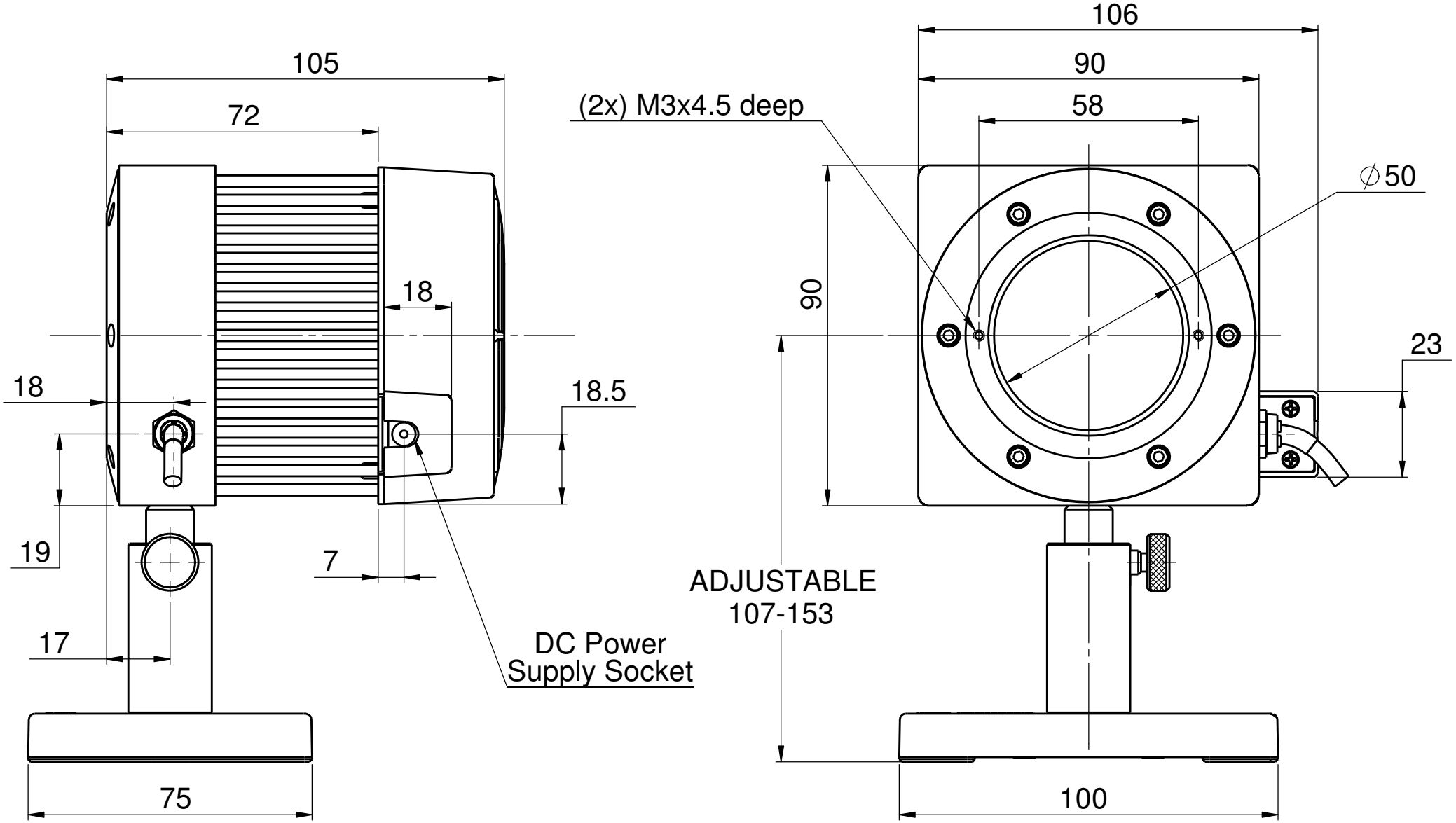
105
72
18
18
18.5
19
7
17
75
DC Power
Supply Socket
106
90
58
(2x) M3x4.5 deep
∅50
90
23
ADJUSTABLE
107-153
100