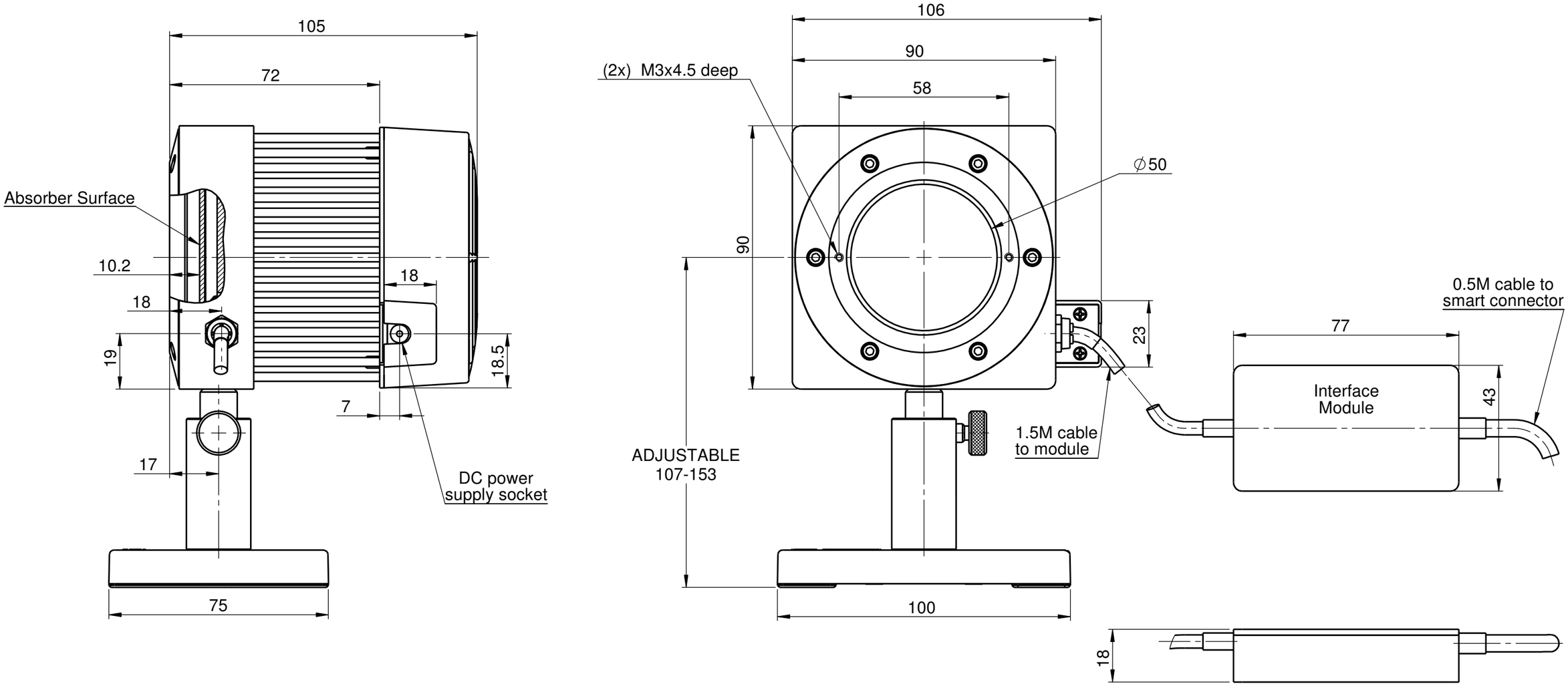
105
72
Absorber Surface
10.2
18
18
19
18.5
7
17
DC power
supply socket
75
106
90
58
(2x) M3x4.5 deep
∅50
90
23
ADJUSTABLE
107-153
1.5M cable
to module
100
0.5M cable to
smart connector
77
Interface
Module
43
18