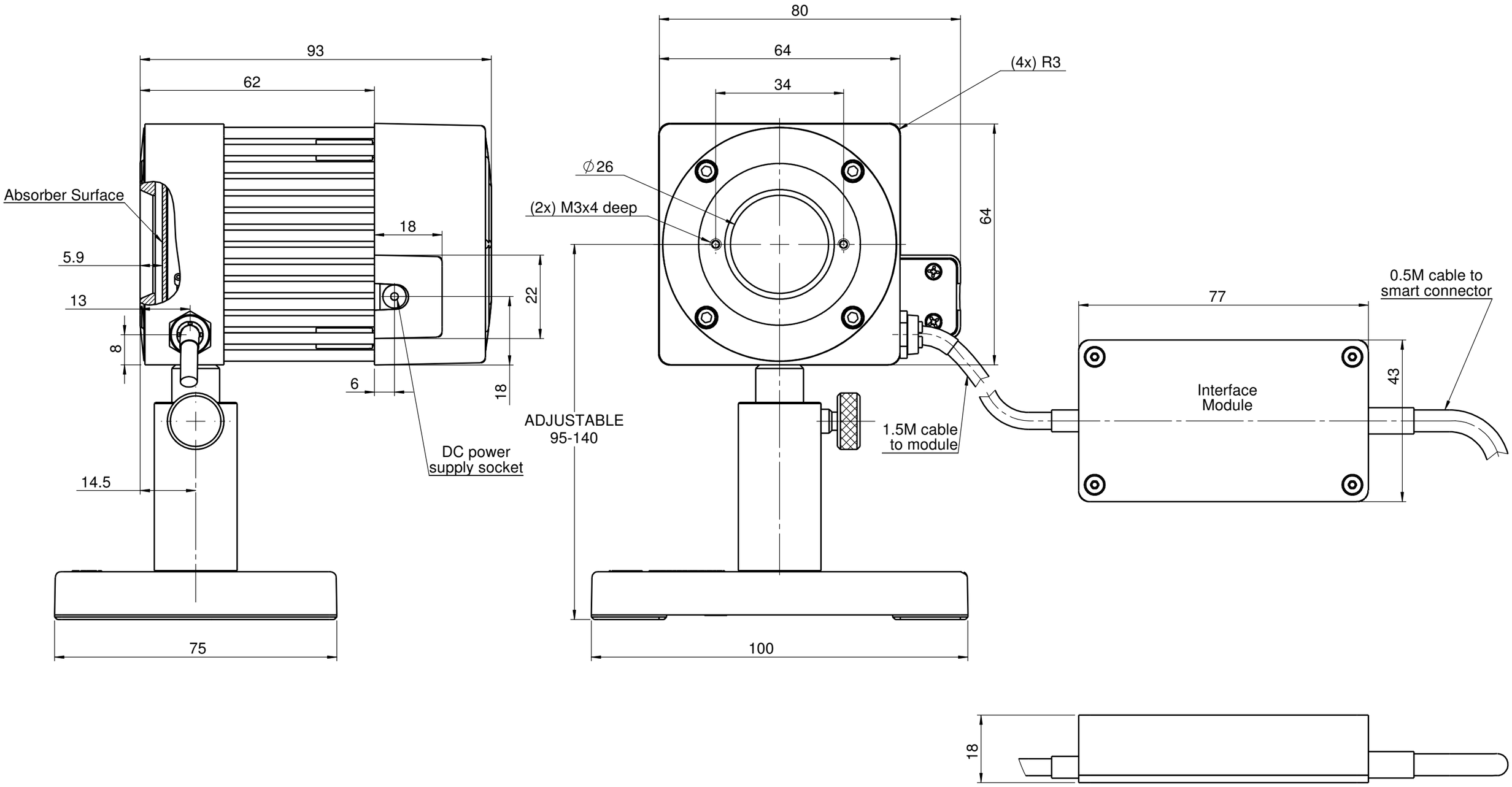
93
62
Absorber Surface
5.9
13
8
14.5
75
18
22
6
18
DC power
supply socket
80
64
34
(4x) R3
∅26
(2x) M3x4 deep
64
ADJUSTABLE
95-140
1.5M cable
to module
100
77
0.5M cable to
smart connector
Interface
Module
43
18