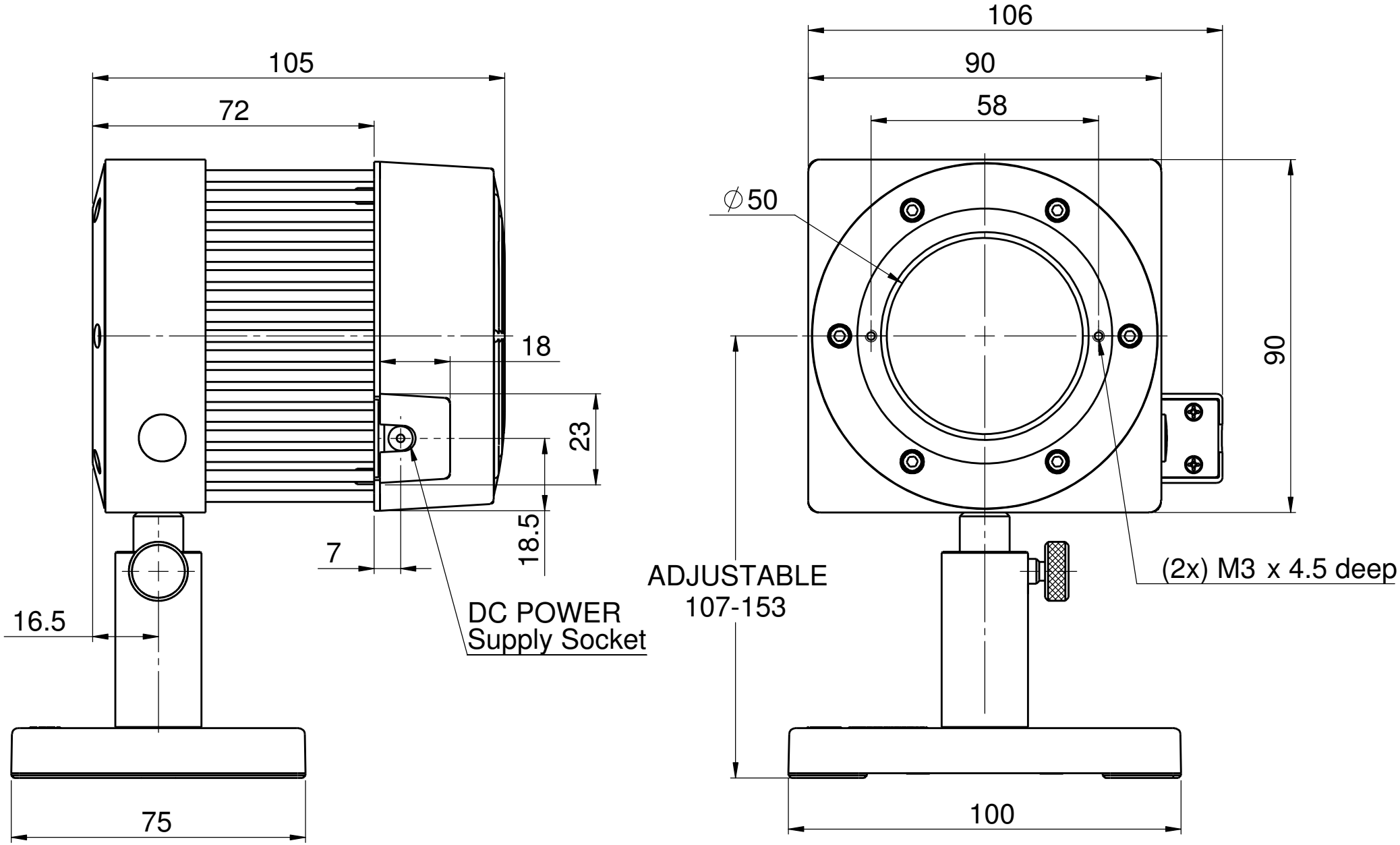
105
72
18
23
18.5
7
16.5
75
DC POWER
Supply Socket
106
90
58
∅50
90
ADJUSTABLE
107-153
(2x) M3 x 4.5 deep
100