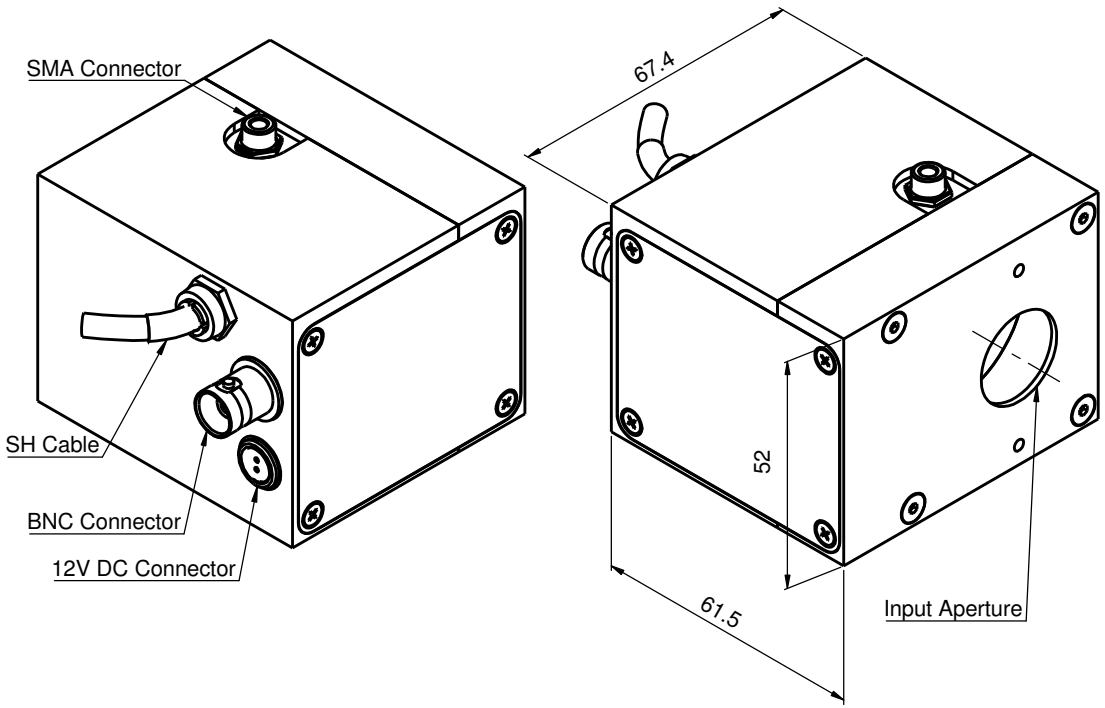
SMA Connector
SH Cable
BNC Connector
12V DC Connector
67.4
52
61.5
Input Aperture

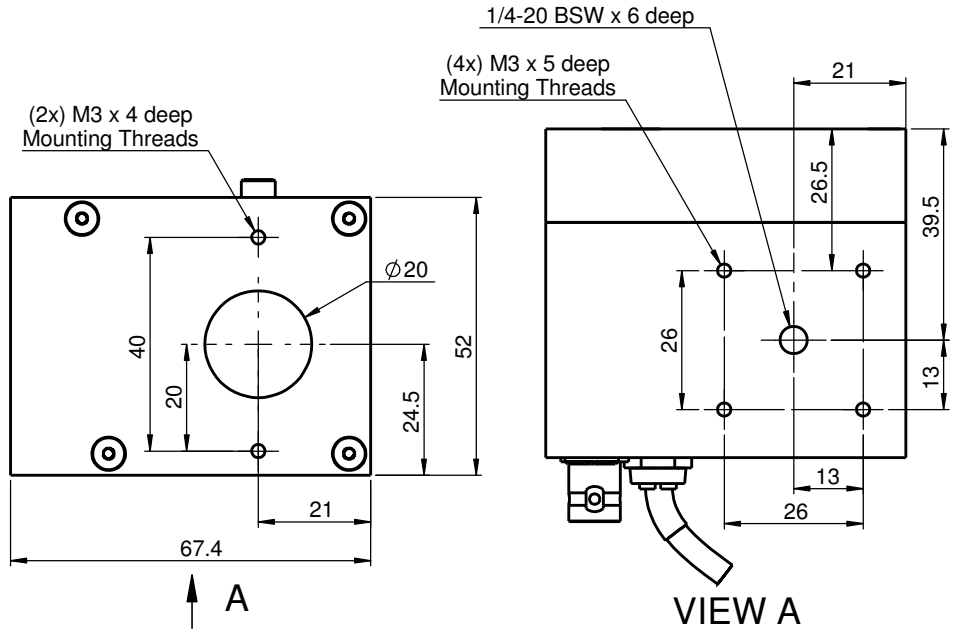
(2x) M3 x 4 deep
Mounting Threads
∅20
40
20
52
24.5
21
67.4
A
1/4-20 BSW x 6 deep
(4x) M3 x 5 deep
Mounting Threads
21
26.5
39.5
26
13
13
26
VIEW A