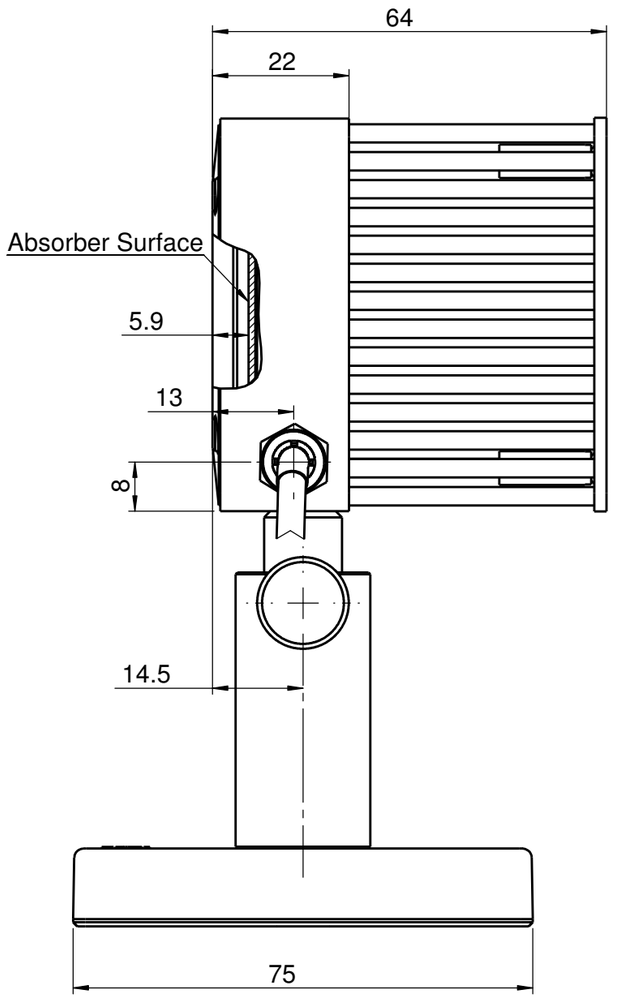
64
22
Absorber Surface
5.9
13
8
14.5
75

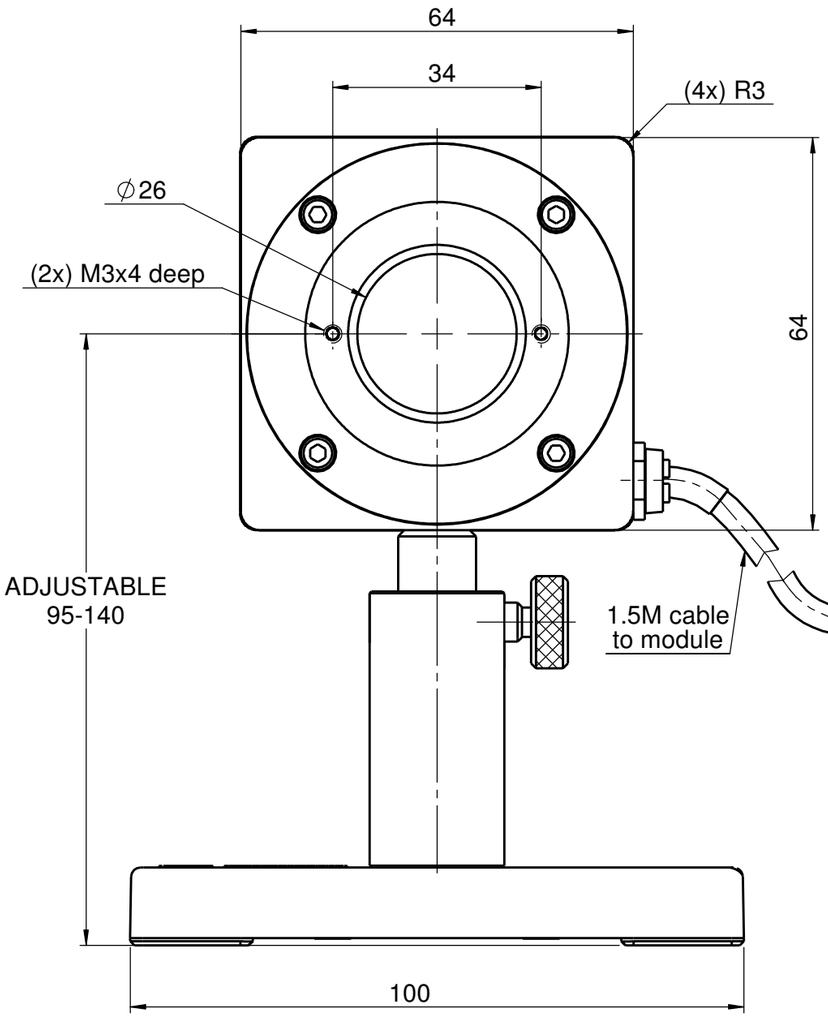
64
34
(4x) R3
∅26
(2x) M3x4 deep
64
ADJUSTABLE
95-140
1.5M cable
to module
100

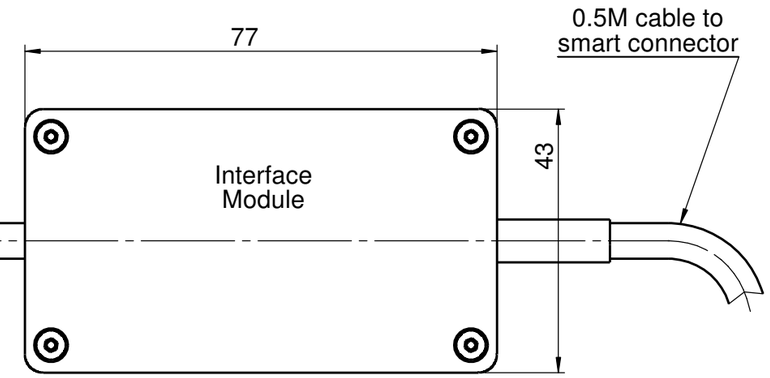
77
0.5M cable to
smart connector
Interface
Module
43

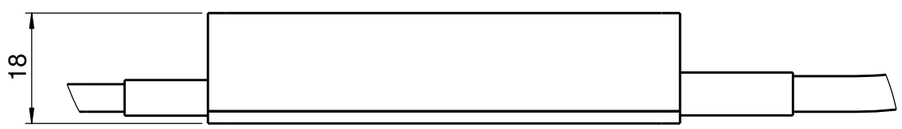
18