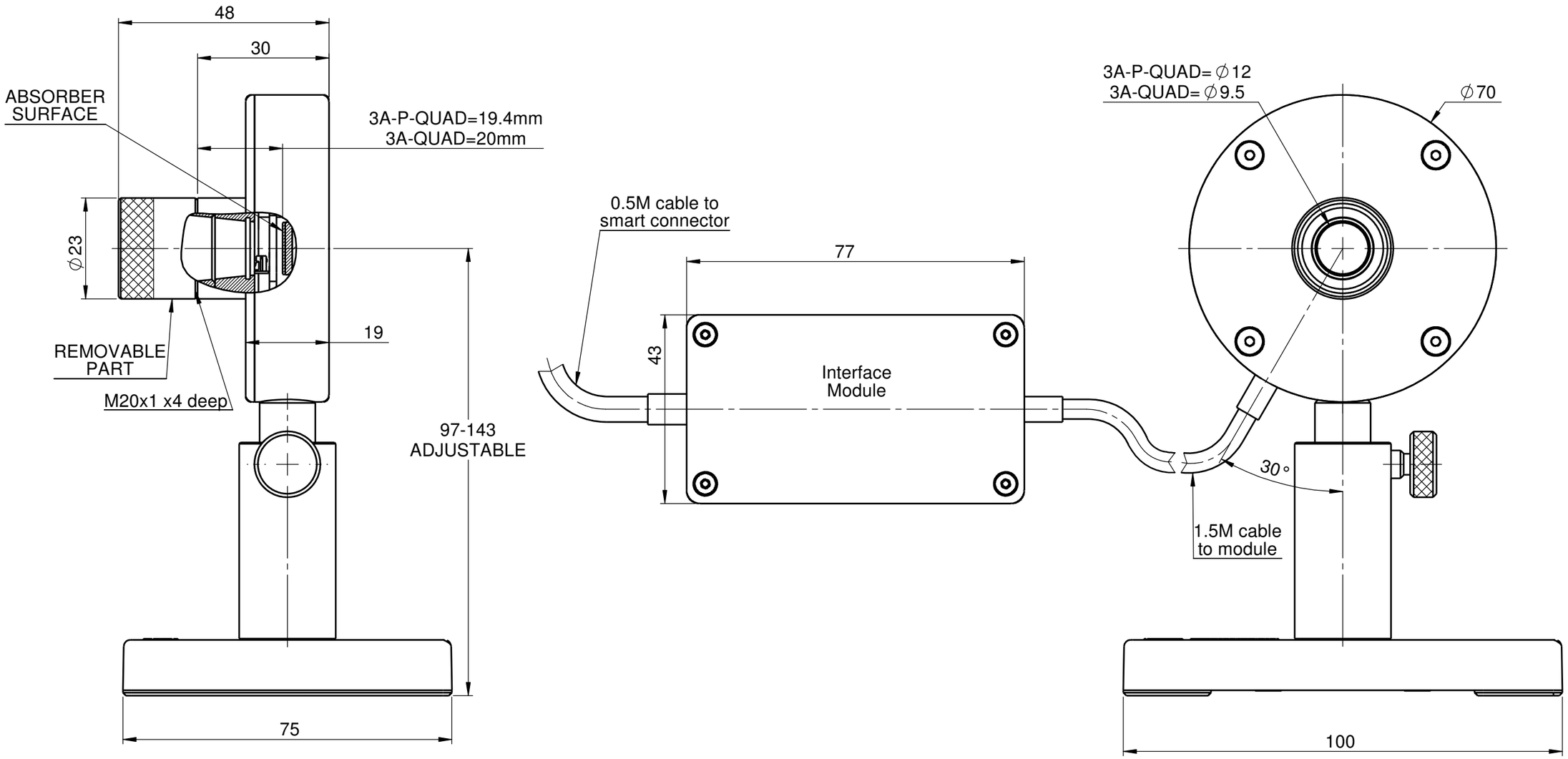
48
30
ABSORBER SURFACE
3A-P-QUAD=19.4mm
3A-QUAD=20mm
∅23
19
REMOVABLE PART
M20x1 x4 deep
97-143 ADJUSTABLE
75
0.5M cable to smart connector
77
43
Interface Module
3A-P-QUAD=∅12
3A-QUAD=∅9.5
∅70
30°
1.5M cable to module
100