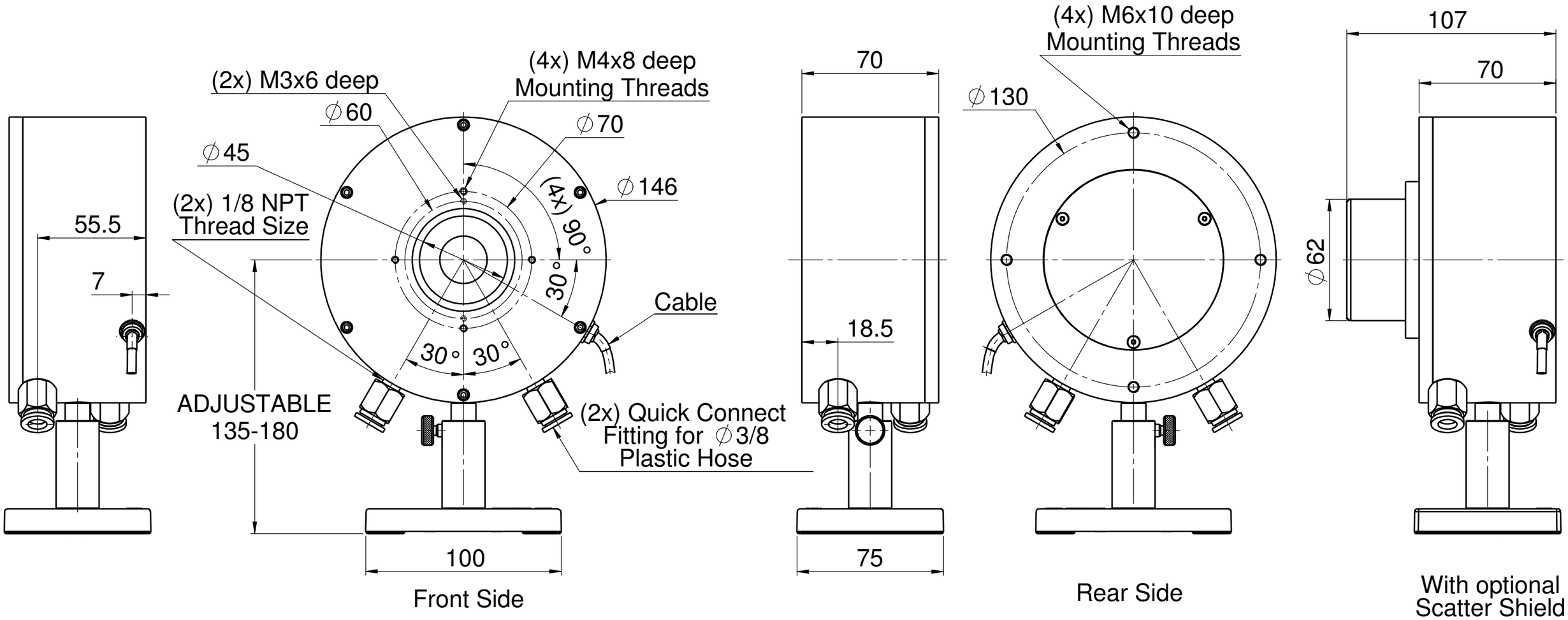
55.5
7
(2x) M3x6 deep
∅60
(4x) M4x8 deep
Mounting Threads
∅70
∅45
∅146
(2x) 1/8 NPT
Thread Size
(4x) 90°
30°
Cable
30°
30°
ADJUSTABLE
135-180
(2x) Quick Connect
Fitting for ∅3/8
Plastic Hose
100
Front Side
70
18.5
75
∅130
(4x) M6x10 deep
Mounting Threads
Rear Side
107
70
∅62
With optional
Scatter Shield