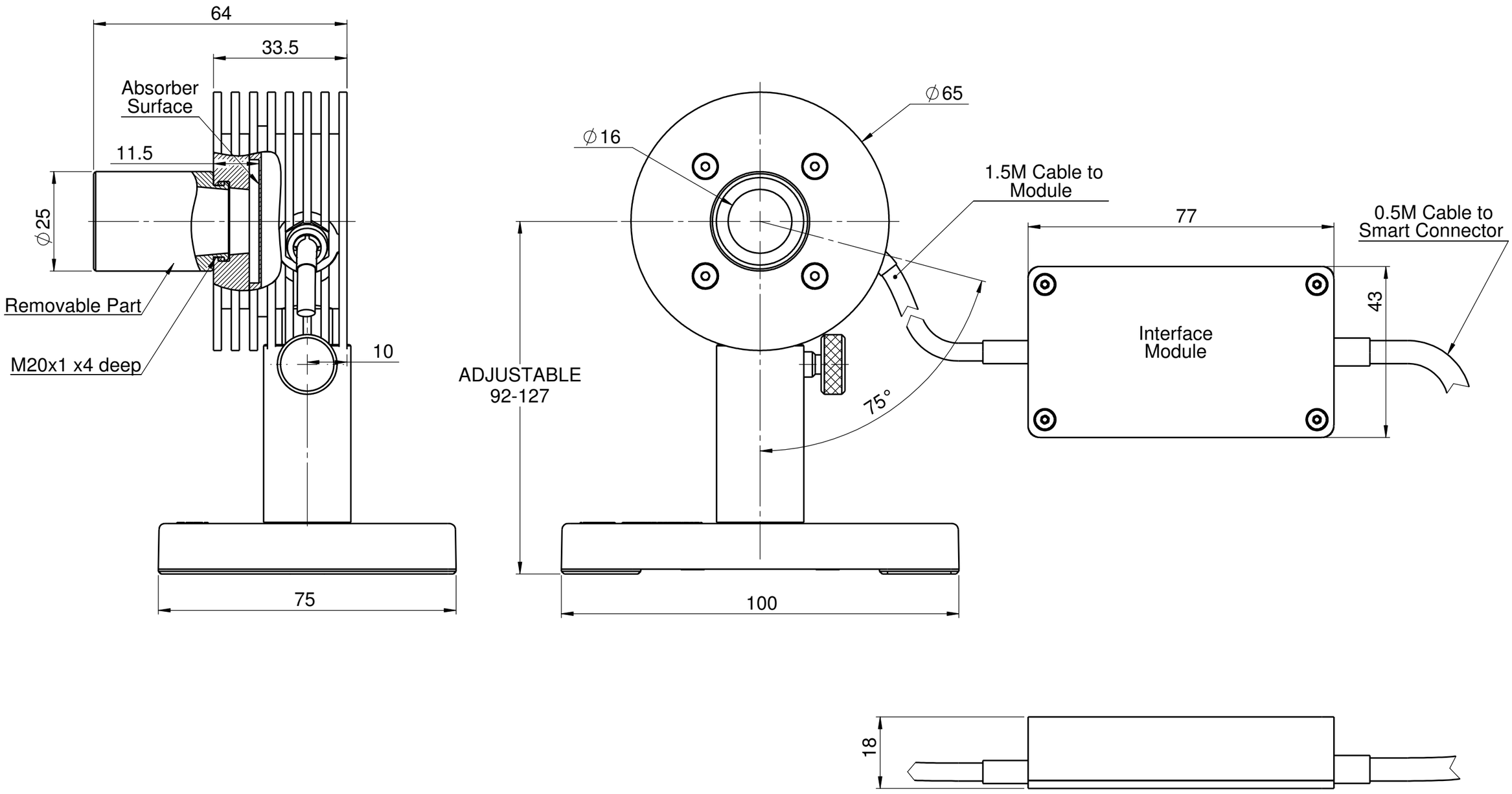
64
33.5
Absorber Surface
11.5
∅25
Removable Part
M20x1 x4 deep
10
75
∅65
∅16
1.5M Cable to Module
ADJUSTABLE 92-127
75°
100
77
0.5M Cable to Smart Connector
43
Interface Module
18