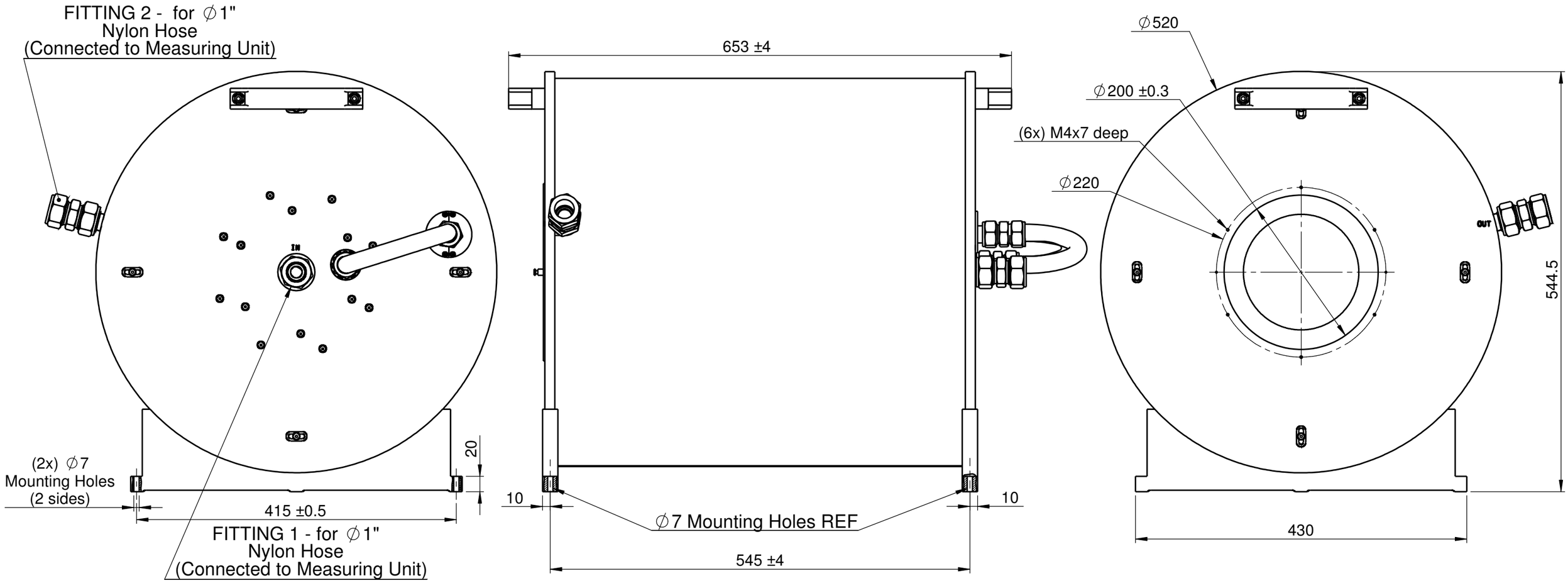
FITTING 2 - for ∅1"
Nylon Hose
(Connected to Measuring Unit)
IN
(2x) ∅7
Mounting Holes
(2 sides)
20
415 ±0.5
FITTING 1 - for ∅1"
Nylon Hose
(Connected to Measuring Unit)
653 ±4
10
10
∅7 Mounting Holes REF
545 ±4
∅520
∅200 ±0.3
(6x) M4x7 deep
∅220
OUT
544.5
430

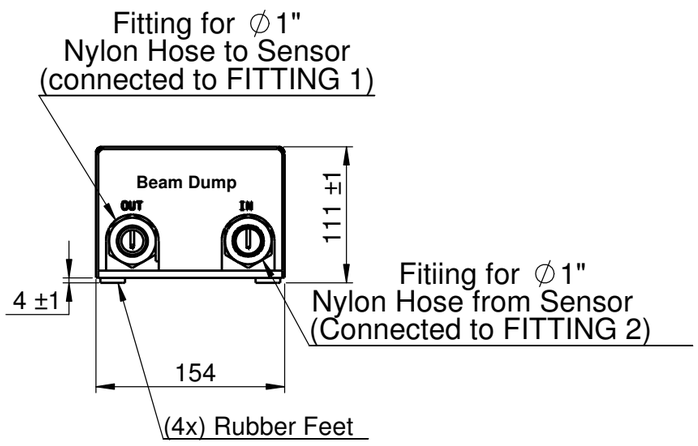
Fitting for ∅1"
Nylon Hose to Sensor
(connected to FITTING 1)
Beam Dump
OUT
IN
111 ±1
4 ±1
Fitiing for ∅1"
Nylon Hose from Sensor
(Connected to FITTING 2)
154
(4x) Rubber Feet

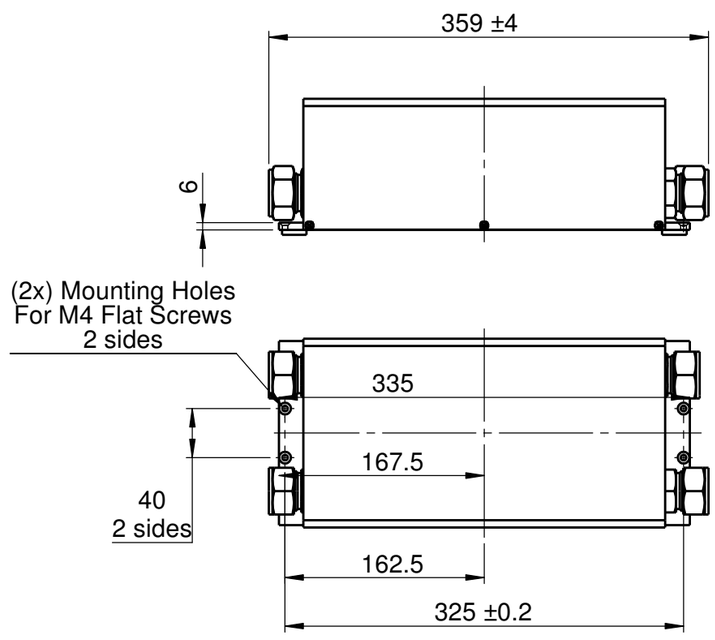
359 ±4
6
(2x) Mounting Holes
For M4 Flat Screws
2 sides
335
167.5
40
2 sides
162.5
325 ±0.2

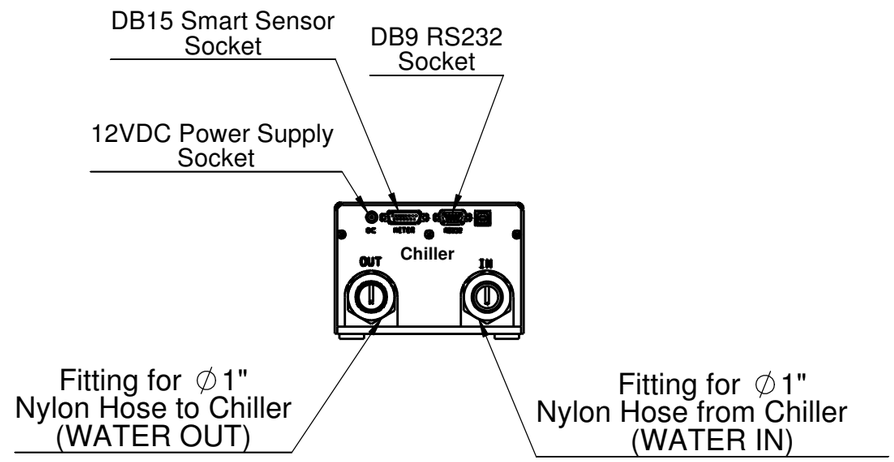
DB15 Smart Sensor
Socket
DB9 RS232
Socket
12VDC Power Supply
Socket
Chiller
OUT
IN
Fitting for ∅1"
Nylon Hose to Chiller
(WATER OUT)
Fitting for ∅1"
Nylon Hose from Chiller
(WATER IN)