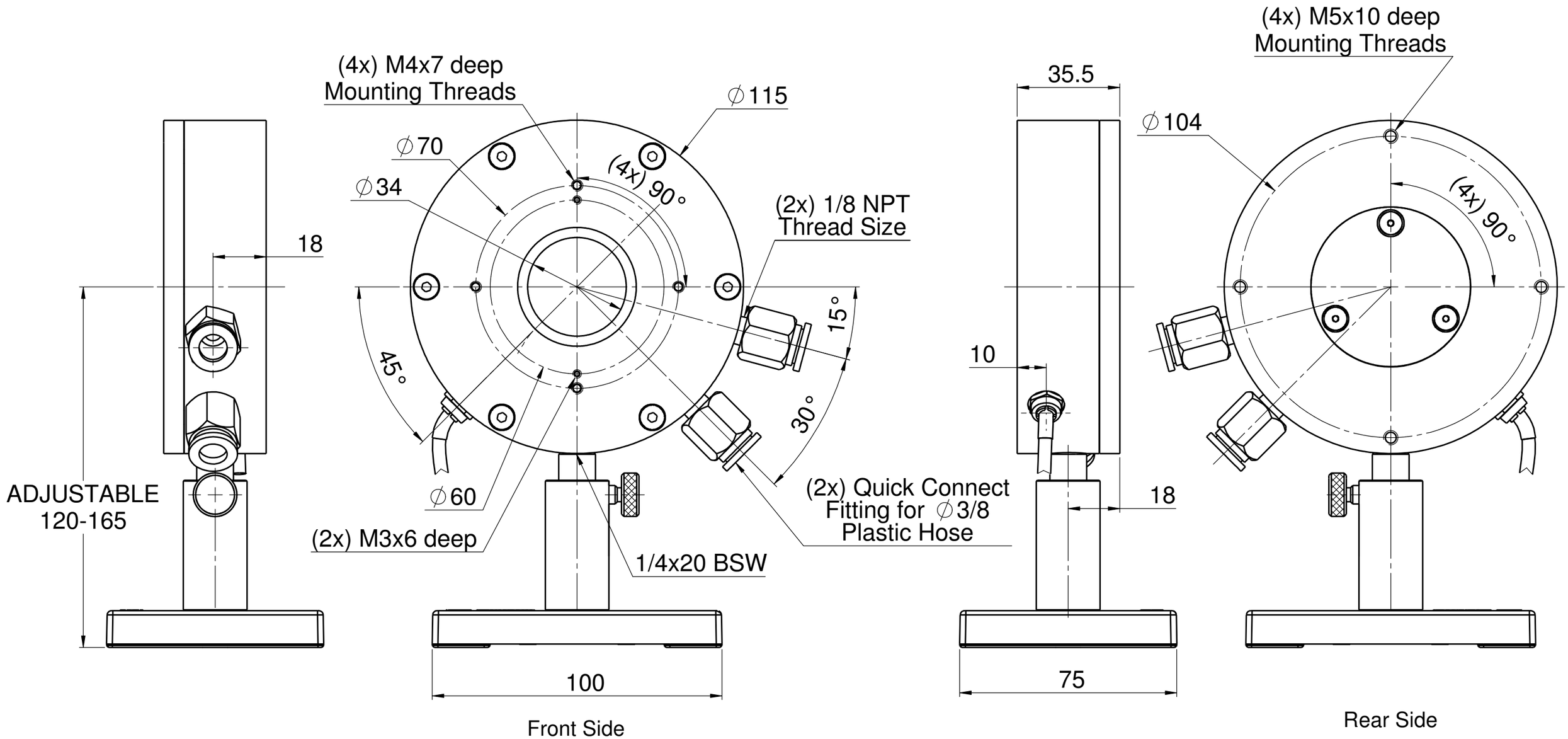
(4x) M4x7 deep
Mounting Threads
∅115
∅70
∅34
(4x) 90°
(2x) 1/8 NPT
Thread Size
18
15°
45°
30°
ADJUSTABLE
120-165
∅60
(2x) M3x6 deep
1/4x20 BSW
(2x) Quick Connect
Fitting for ∅3/8
Plastic Hose
100
Front Side
35.5
∅104
(4x) M5x10 deep
Mounting Threads
(4x) 90°
10
18
75
Rear Side