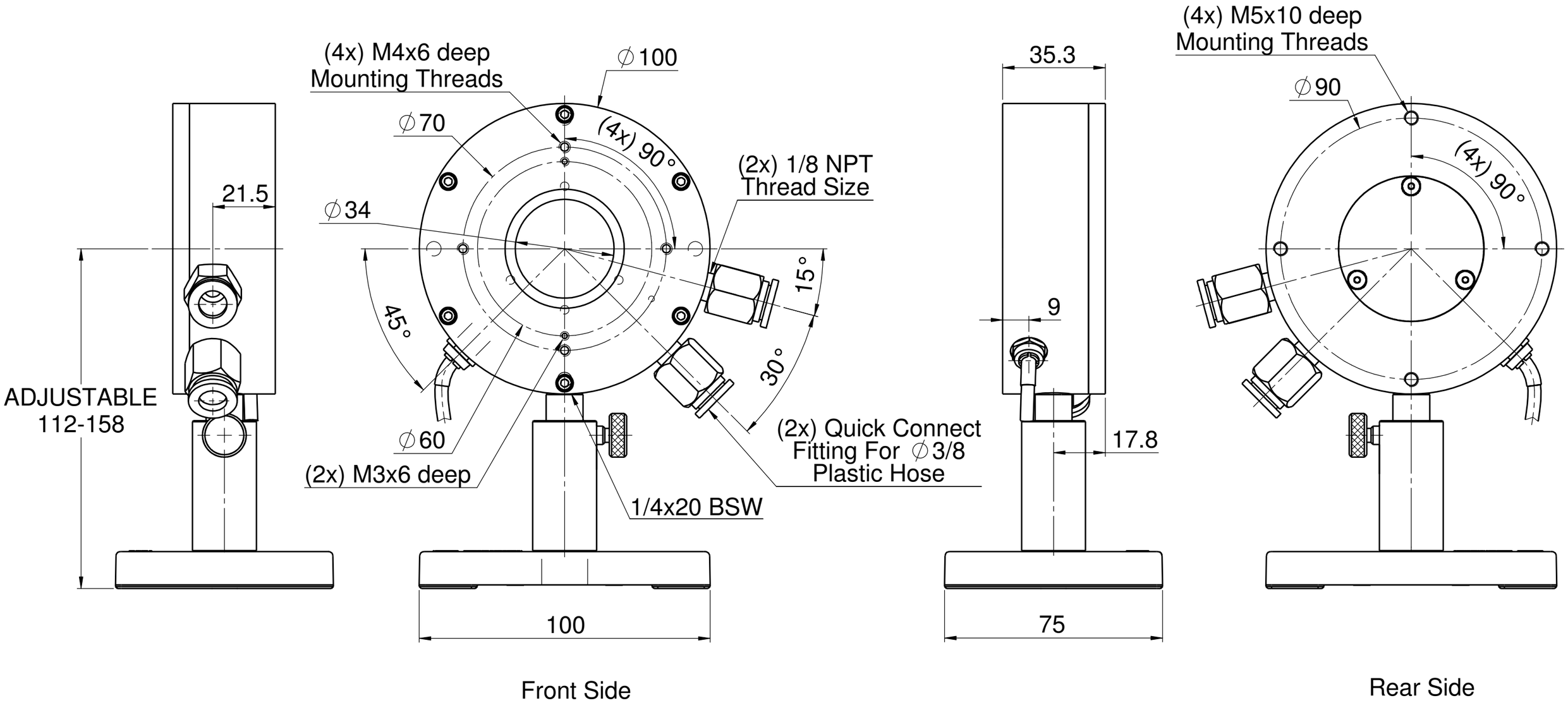
(4x) M4x6 deep
Mounting Threads
∅100
∅70
(4x) 90°
(2x) 1/8 NPT
Thread Size
21.5
∅34
15°
45°
30°
ADJUSTABLE
112-158
∅60
(2x) M3x6 deep
(2x) Quick Connect
Fitting For ∅3/8
Plastic Hose
1/4x20 BSW
100
Front Side
35.3
9
17.8
75
(4x) M5x10 deep
Mounting Threads
∅90
(4x) 90°
Rear Side