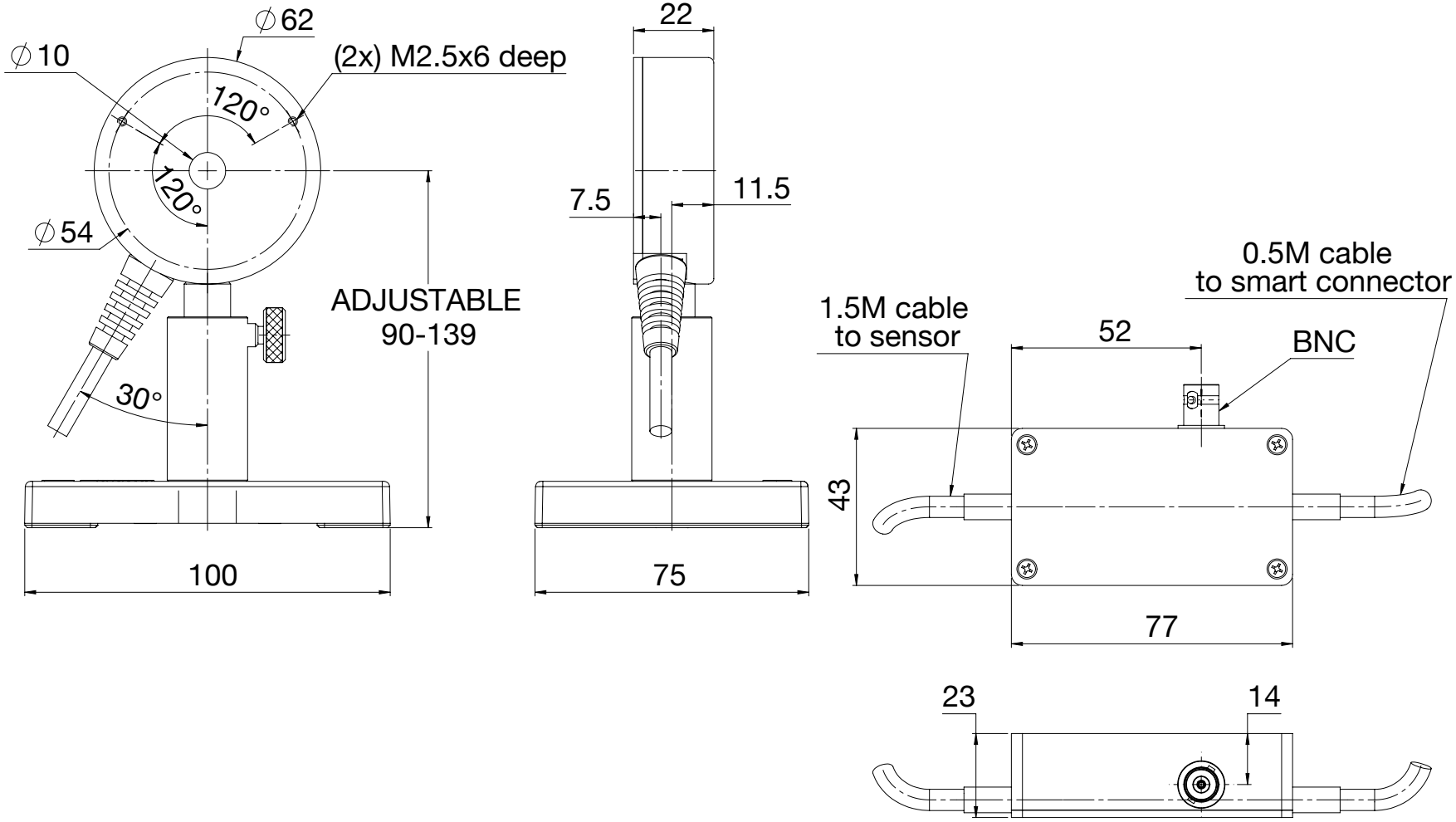
∅62
∅10
(2x) M2.5x6 deep
120°
120°
∅54
ADJUSTABLE
90-139
30°
100
22
7.5
11.5
75
0.5M cable
to smart connector
1.5M cable
to sensor
52
BNC
43
77
23
14

Ophir®